Rated range:50mA DC12V
Insulation resistance:≥100MΩmin (DC100V)
Contact resistance:≤300mΩ
Compressive strength:AC100V(50/60Hzfoy1minute)
Mechanical life:50000 cycles
Operating temperature:-10℃~+60℃
Operation strength:50±30gf

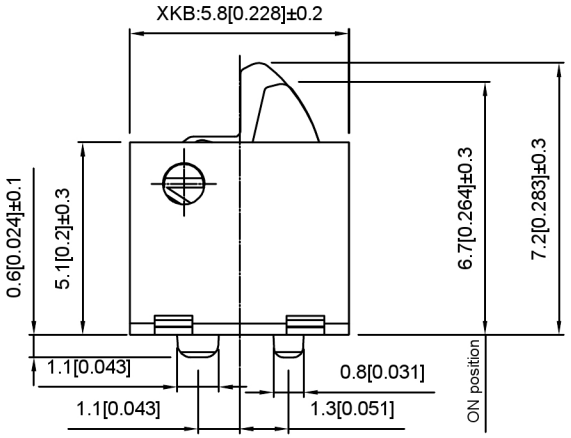

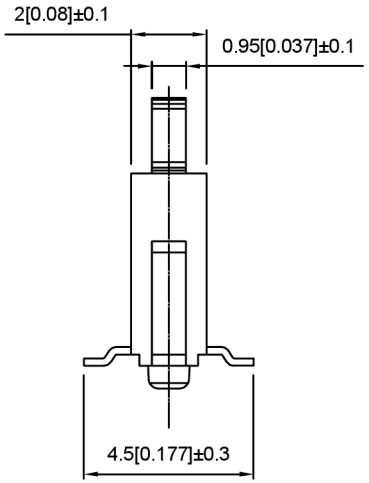

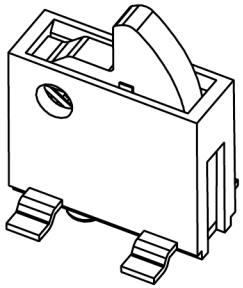

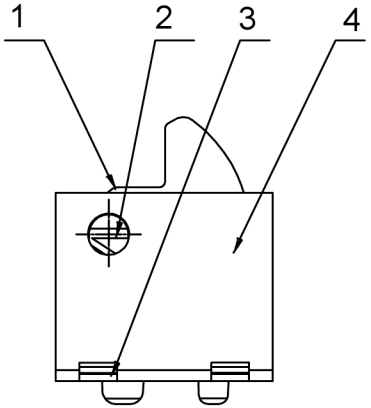

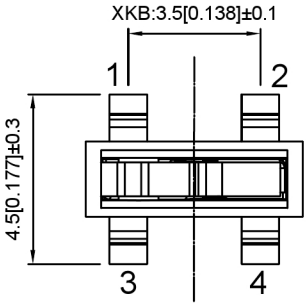

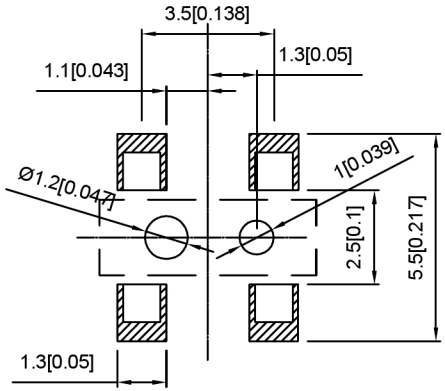

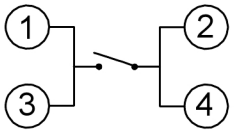

PCB

ITEM	PAPT NAMF	QTY	Material	colour
4	Button	1	PPA	black
3	Spring	1	Phosphorous copper	plate with silver
2	Welding foot	1	correrH62-0.2	silvery
1	Pedestal	1	PPA	black

广东星坤科技股份有限公司
文件工程章

MARK	DESCRIPTION	DATE	REVISED	APPROVED
Δx				
Δx				
Δx				

REVISIONS

www.helloxkb.com www.helloxkb.cn www.xk-dg.cn

UNSPECIFIED TOLERANCES	
ANGLAR	±5°
L≤ 4	±0.2
4<L≤ 16	±0.3
16<L≤ 63	±0.4
L> 63	±0.5

XKB INDUSTRIAL PRECISION CO.,LIMITED

DSND		SCALE: N/A	MODEL TYPE: DETECT SWITCH
DWN		VIEW:	PART NO.: TM-1627S
CHKD		UNIT: mm/in	DWG NO.:
APPD		SIZE: A4	

WEIGHT	SHEET	REVISIC
	1/1	A0