ITEM NO.	PART NUMBER	DESCRIPTION	QTY.	COMPONENT NOTES
1	50-00026	Connector, dc plug, 5.5x2.5xL23 mm, molding style, spring contacts	1	
2	30-00242	Wire, 2C, 18 AWG, UL SPT-1, 300V, 105C, 5.55 mm, VW-1, PVC	1	
3	24-00201	Overmold, PVC, dc plug	1	black
4	50-00555	Connector, 50 mm, alligator clip, red sleeve	1	
5	50-00556	Connector, 50 mm, alligator clip, black sleeve	1	

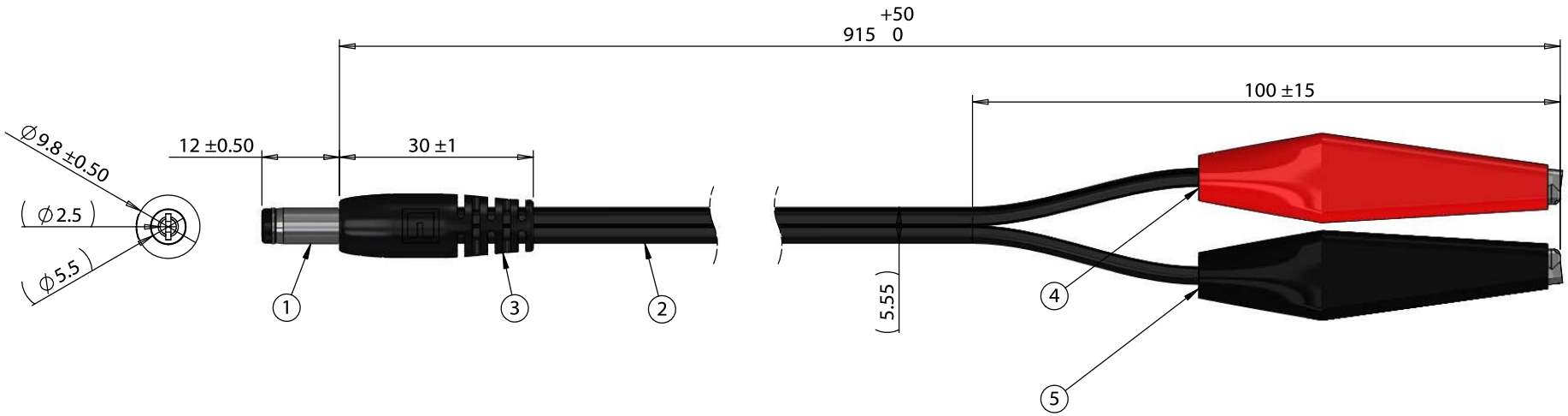

Wiring Diagram		
50-00026	wire color	alligator clip
center	black with tracer	50-00555/red
sleeve	black	50-00556/black

Revision:	Date:	Description:
A	5/23/2017	**Initial release**

Prepared: PS — Digitally signed by PS Date: 2017.07.20 15:56:03 -07'00'

Verified: GL — Digitally signed by GL Date: 2017.07.21 08:31:03 -07'00'

Dimensions are in millimeters.
Tolerances:
X: ± 0.5 mm
X.X: ± 0.3 mm
X.XX: ± 0.05 mm

Notes:

RoHS compliant

Function test: no open, no short circuit, no intermittent

Description:

Cable, 915 mm, 5.5x2.5 mm 50-00026 dc plug to alligator clips, 18 AWG, 30-00242 wire

TENSILITY

tel 1.541.323.3228 *800* 877.670.7118
fax 1.541.323.4202 *web* tensility.com

Size: A

Part number: 10-02459

Scale: 1:1

Sheet 1 of 1

5 4 3 2 1