3 PORTS KEYSTONE FACEPLATE

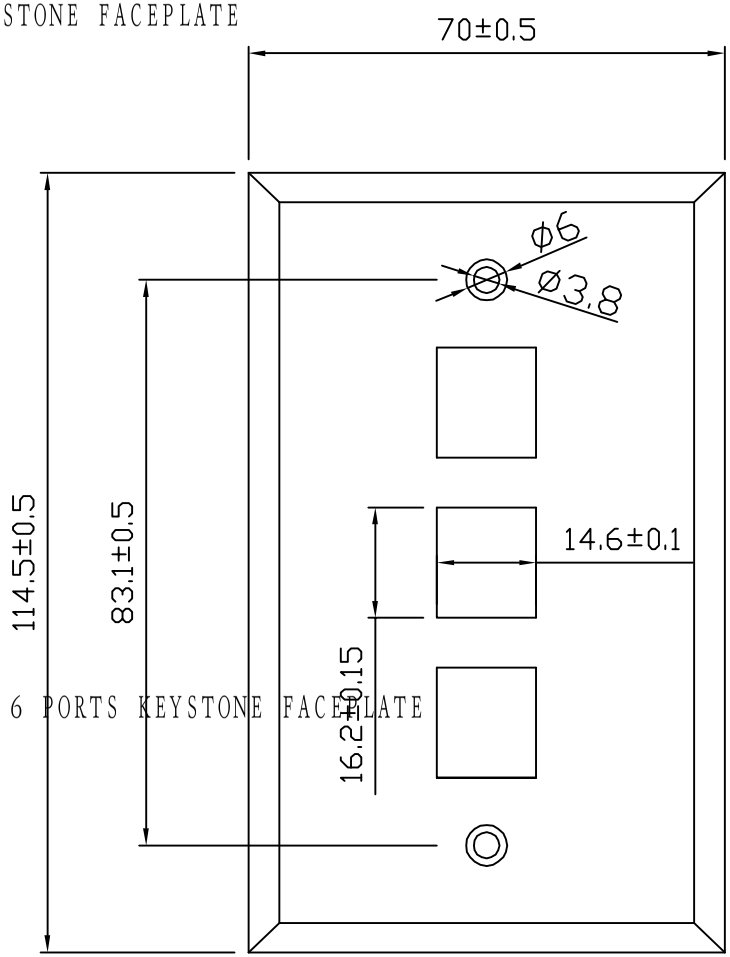

6 PORTS KEYSTONE FACEPLATE

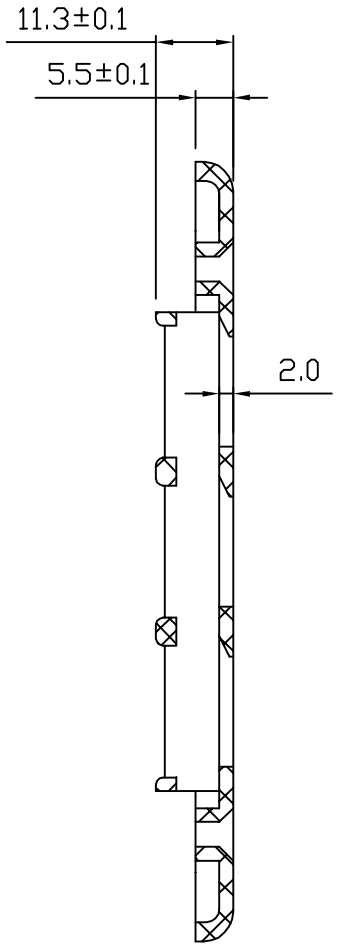

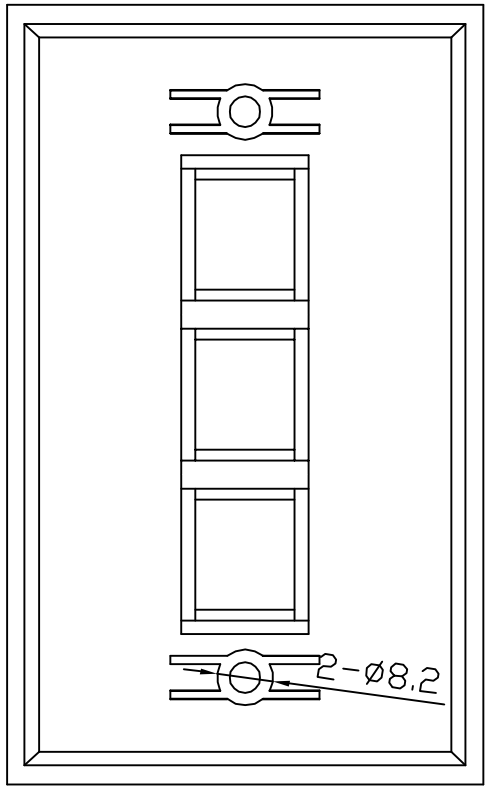

OTHER TOLERANCE: 0.1

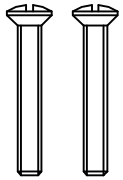

6*250M Screw

QUEST TECHNOLOGY INTERNATIONAL,Inc				DESCRIPTION	FINISHED PRODUCTS	SCALE	FIT	UNITS: mm	1RD ANGLE
				MODEL NO,	NFP-101X				
APPROVED	CHECKED	DRAWING	DESIGNED	DRAWING NO,	99-CA73-XXXX				
		Steven Cheng		FINISHING		▲	01/07/2007		A1
				MATERIAL		SYM			REVISION