THIS COPY IS PROVIDED ON A RESTRICTED BASIS AND IS NOT TO BE USED IN ANY WAY DETRIMENTAL TO THE INTERESTS OF PANDUIT CORP.

PANDUIT P/N	WEIGHT
WMP1E	2.3 LBS/EACH 1043 g/EACH

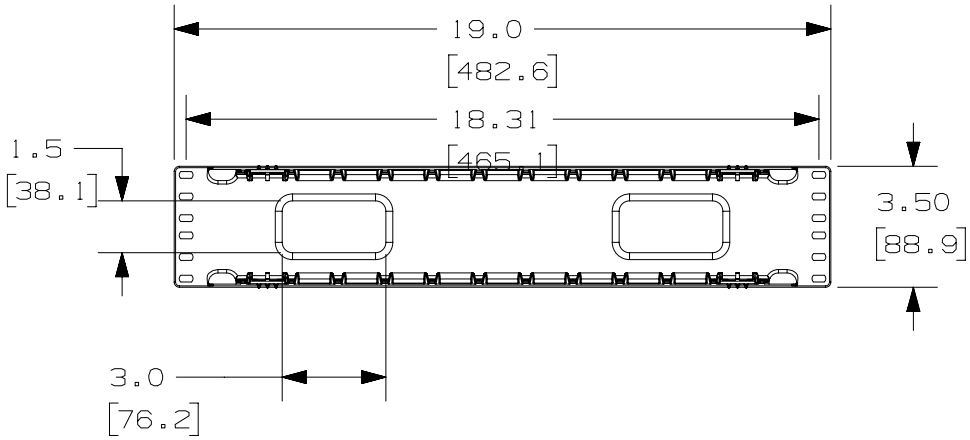

NOTES:
1. DESIGNED FOR MOUNTING ON 19" EIA RACKS.
2. COMPONENTS:
   1- MANAGER
   2- 17" X 3.6" DUAL HINGED COVERS
   4- #12-24 x 1/2" SCREWS
3. DIMENSIONS IN PARENTHESES ARE METRIC.

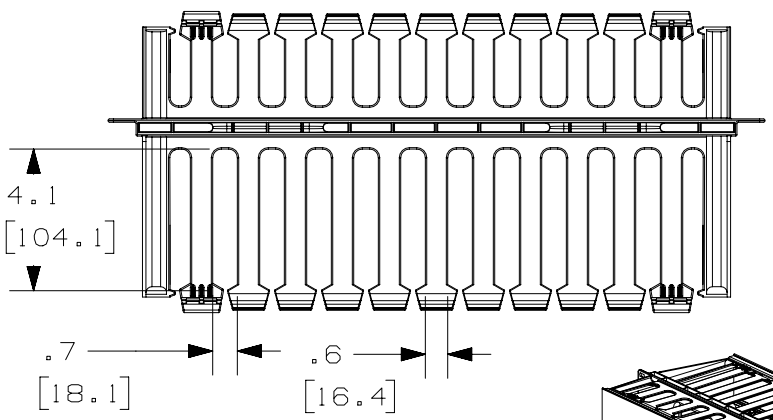

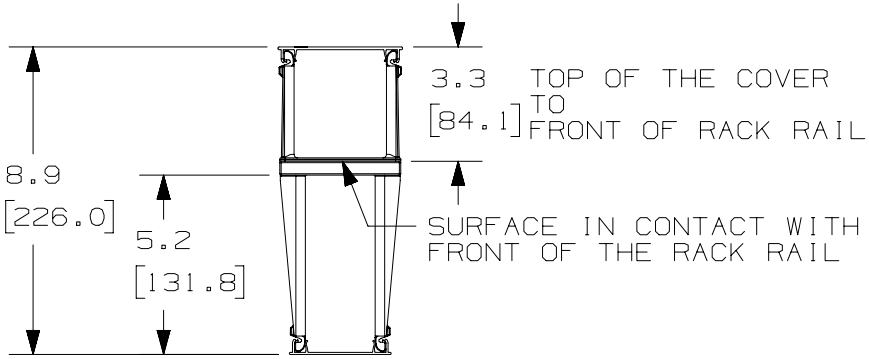

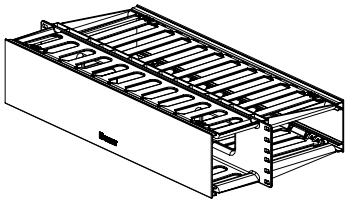

REV	DATE	BY	CHK	APR	DESCRIPTION	ECN
09A	11-29-17	TWV	JEFK	JEFK	REMOVED PART NUMBER WMP1E-V	V10101AA-DC
08A	3-26-15	TWV	MACA	KRKE	BOM ADJUSTMENT; REVISED NOTES.	V10101AA-DC
07D	4-22-13	BAME	RYB	CMK	REVISED AND REDRAWN; ALL PREVIOUS REVS OMITTED UPDATED TITLE BLOCK	V10101AA-DC

TITLE

WMP1E HORIZONTAL MANAGER

CUSTOMER DRAWING

ITEM REVISION NAME: V10101AA/09

DATASET FILE NAME: V10101AA_DC/09A

UNLESS OTHERWISE SPECIFIED, DIMENSIONAL TOLERANCES ARE: IN [mm]

.X ± .XXX ±
.XX ± ANGLES ±

THIRD ANGLE PROJECTION

MATERIAL: ABS

DRAWING NUMBER: V10101AA-DC

DRAWN BY	DATE	CHK	SCALE		SIZE
JDWE	12-17-02	MECA	NONE	SHT 1 OF 1	A

D10100DA/15