THIS COPY IS PROVIDED ON A RESTRICTED BASIS AND IS NOT TO BE USED IN ANY WAY DETRIMENTAL TO THE INTERESTS OF PANDUIT CORP.

PANDUIT PART NO.	WEIGHT
PRSP7	.18 LBS/EACH 81.6 g/EACH

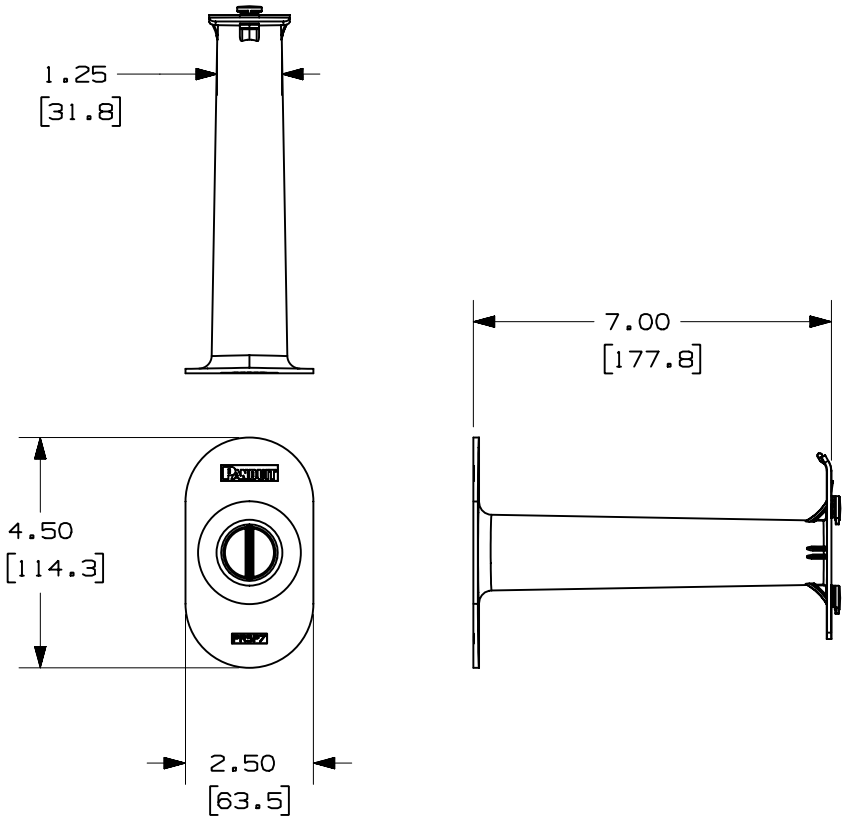

NOTES:
1. VISIT OUR ON-LINE CATALOG AT WWW.PANDUIT.COM FOR A CURRENT LIST OF PRODUCTS APPLICABLE FOR USE WITH THIS PART.
2. DIMENSIONS IN PARENTHESIS ARE METRIC.

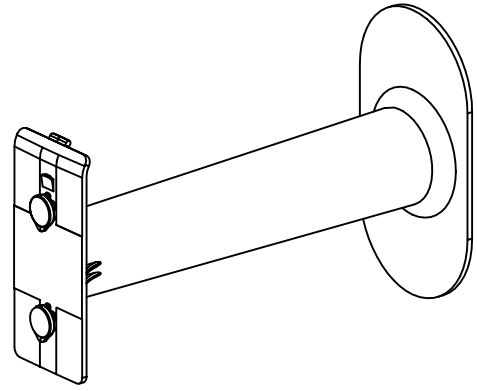

MODEL FILENAME: V10197BB_PR_SPL_7_01.PRT

CAD FILENAME/LAYERS: V10197BB_DC_01A.PRT

PANDUIT CORP. TINLEY PARK, ILLINOIS

7" LONG PATCHRUNNER SPOOL
CUSTOMER DRAWING

UNLESS OTHERWISE SPECIFIED, DIMENSIONAL TOLERANCES ARE:

INCHES		[METRIC - MILLIMETER]		ANGLE
X.X	+/- 0.03	X.	+/- 0.8	+/- 1°
X.XX	+/- 0.015	X.X	+/- 0.4	
X.XXX	+/- 0.005	X.XX	+/- 0.13	

UNLESS OTHERWISE SPECIFIED, ALL DIMENSIONS ARE GIVEN IN INCHES, THIRD ANGLE PROJECTION.

DRAWN BY: JDWE

MAT'L: POLYCARBONATE

SCALE: NONE

DATE: 5-18-04

CHK'D:

DRAWING NO.: 10197-04

DWG SIZE: A

REV	DATE	BY	CHK	DESCRIPTION	ECN - R	CUST	SUP	OTH
R	5-18-04	JDWE		RELEASED TO PRODUCTION	10197-04			