Transfer or duplication of this doucument as well as the utilisation or communication of its content are not permitted unless express consen is granted. Violations give rise to claims for damages. All rights reserved in case of patent, utility model or design patent registrations.

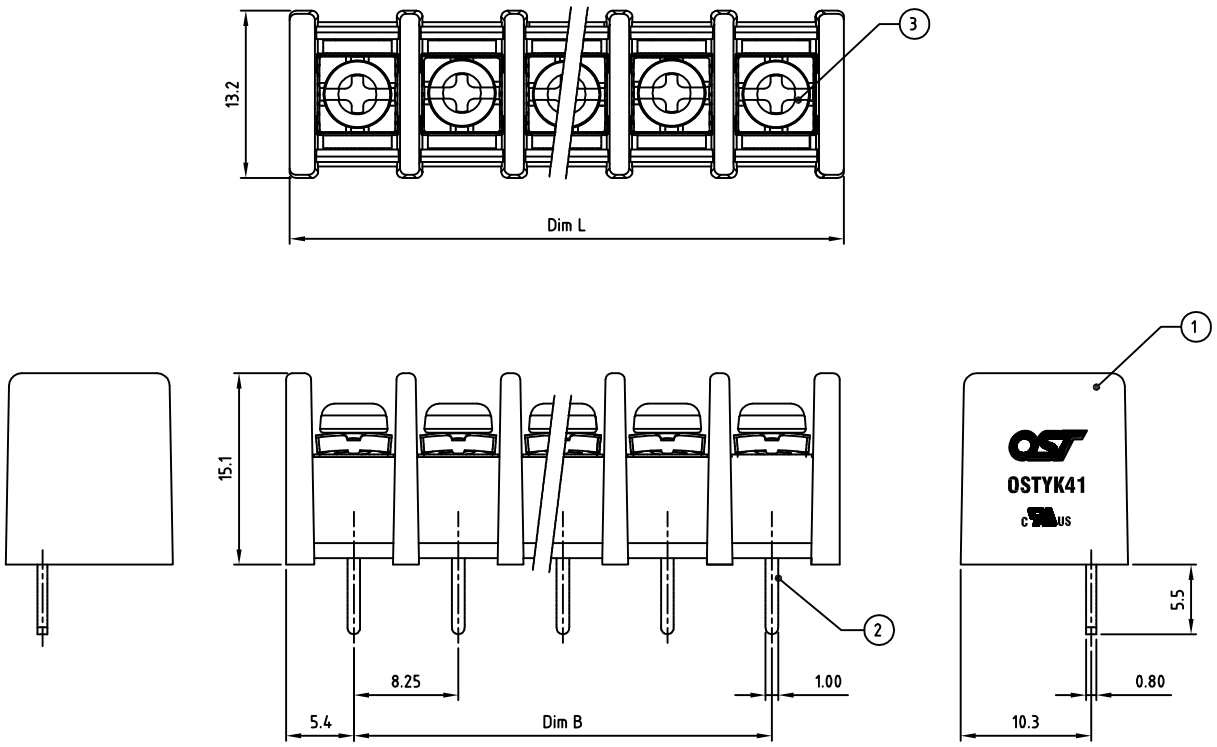

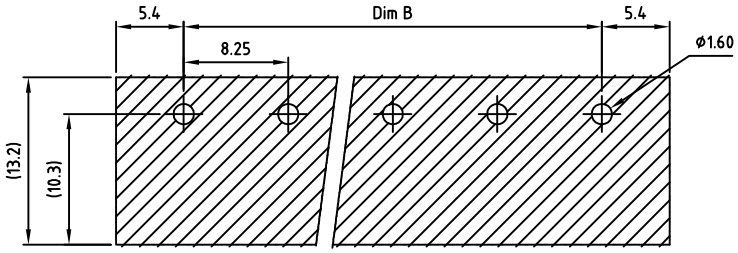

P.C.B LAYOUT

Technical data

1.Nominal voltage: 300V/20A
PITCH: 8.25mm

2.Connection capacity:
AWG 22-12

3.Insulation Withstanding Voltage:
AC 2500V/MIN

4.Insulation Resistance:
1000MΩ or more at DC500V

5.Tightening torque:
10.15kgf.cm (8.8 Lb-In / 1.0N.m)

6.Screw thread: M3

7.Using temperature range:-40°C ~ 115°C
Soldering temperature:250°C±10°C /5s

8.Undimen sioned Tolerances:

Dim.L=Px8.25+1.8
Dim.B=(P-1)x8.25
P= number of poles

	Dim B	Dim L
0-30mm	±0.15	±0.20
over 30mm-60mm	±0.20	±0.30
over 60mm-90mm	±0.25	±0.40
over 90mm-180mm	±0.30	±0.50
over 180mm	±0.50	±0.80

9.Safety approval:
10.RoHS Compliance

Part No.: OSTYK414XX030

No. of Poles
02 2 Poles
03 3 Poles
... ...
24 24 Poles

ITEM	NAME OF PART	MATERIAL	NOTES	Q"TY
3	SCREW+WASHER	STEEL	M3×0.5, Ni Plated	P
2	CONTACT	BRASS	M3×0.5, Tin PLATED	P
1	BODY	PA66 UL94V-0	Black	1

DWG.	WF. Zhang	DATE	2017.10.31	UNITS:	MM	SHEET:	1 OF 1
CHK.	WF. Zhang	DATE	2017.10.31	SCALE:	NONE 2:1 (:)	REV.: A	
APP.		DATE		TITLE:	OSTYK414 8.25 Series		
				PART NO.	OSTYK414XX030		
				DWG NO.	OSTYK414XX030.dwg		

Tolerance
X. ±0.50
X.X ±0.30
X.XX ±0.10
X° ±1°

SIGN	DESCRIPTION	CHK.	DATE
1			

ON-SHORE TECHNOLOGY, INC.