5015KL (127□x 38L)

General Specifications

Motor Protection:
Auto Restart/Polarity Protection

Insulation Resistance: 10M Ω or over with a DC500V Megger

Dielectric Withstand Voltage: AC 700V 1s

Allowable Ambient Temperature Range:
B50 Class: -10°C ~ +60°C (Operating)
B10 ~ B40 Class: -10°C ~ +70°C (Operating)
All Class: -40°C ~ +70°C (Storage)
(non-condensing environment)

Characteristic Curves

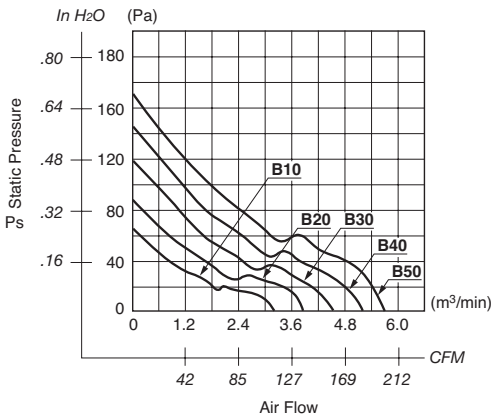

Outline

Units: inch (mm)

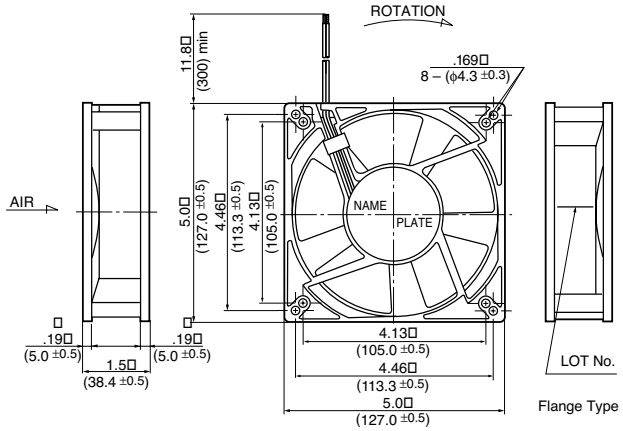

Panel Cut-outs

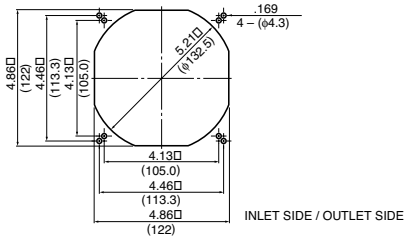

Material

Casing : Plastic (Black) 94V-0
Impeller : Plastic (Black) 94V-0
Bearing : Ball Bearing
Lead Wire: UL1007, AWG24, +Red, -Black

Specifications

MODEL	Product No.	Rated Voltage (V)	Operating Voltage (V)	Current (A)*1	Input Power (W)*1	Speed (min-1)*1	Max. Air Flow CFM*1	Max. Air Flow (m3/min)*1	Max. Static Pressure in H2O	Max. Static Pressure (Pa)*1	Noise (dB)*1	Mass (g)
5015KL-04W-**B10**-	E00	12	8.0 ~ 13.8	0.48	5.76	2600	115.0	3.26	.25	64.1	45.5	360
5015KL-04W-**B20**-	E00	12	8.0 ~ 13.8	0.72	8.64	3100	139.0	3.94	.36	89.7	50.5	360
5015KL-04W-**B30**-	E00	12	8.0 ~ 13.8	0.98	11.76	3600	163.0	4.62	.48	119.7	55.0	360
5015KL-04W-**B40**-	E00	12	8.0 ~ 13.8	1.44	17.28	4000	180.0	5.11	.59	147.8	57.5	360
5015KL-04W-**B50**-	E00	12	8.0 ~ 13.2	2.04	24.48	4400	199.0	5.64	.71	176.5	60.5	360
5015KL-05W-**B10**-	E00	24	18.0 ~ 27.6	0.22	5.28	2600	115.0	3.26	.25	64.1	45.5	360
5015KL-05W-**B20**-	E00	24	18.0 ~ 27.6	0.34	8.16	3100	139.0	3.94	.36	89.7	50.5	360
5015KL-05W-**B30**-	E00	24	18.0 ~ 27.6	0.51	12.24	3600	163.0	4.62	.48	119.7	55.0	360
5015KL-05W-**B40**-	E00	24	18.0 ~ 27.6	0.68	16.32	4000	180.0	5.11	.59	147.8	57.5	360
5015KL-05W-**B50**-	E00	24	18.0 ~ 26.4	0.90	21.60	4400	199.0	5.64	.71	176.5	60.5	360
5015KL-07W-**B10**-	E00	48	36.0 ~ 55.2	0.17	8.16	2600	115.0	3.26	.25	64.1	45.5	360
5015KL-07W-**B20**-	E00	48	36.0 ~ 55.2	0.23	11.04	3100	139.0	3.94	.36	89.7	50.5	360
5015KL-07W-**B30**-	E00	48	36.0 ~ 55.2	0.33	15.84	3600	163.0	4.62	.48	119.7	55.0	360
5015KL-07W-**B40**-	E00	48	36.0 ~ 55.2	0.38	18.24	4000	180.0	5.11	.59	147.8	57.5	360
5015KL-07W-**B50**-	E00	48	36.0 ~ 52.8	0.45	21.60	4400	199.0	5.64	.71	176.5	60.5	360