Downloaded from Arrow.com.

4611110016012

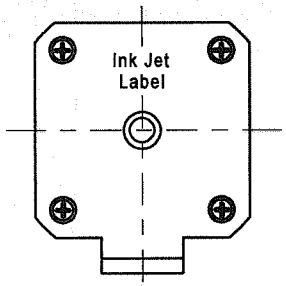

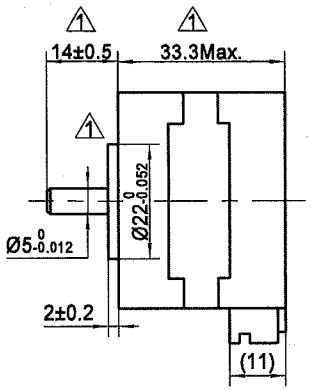

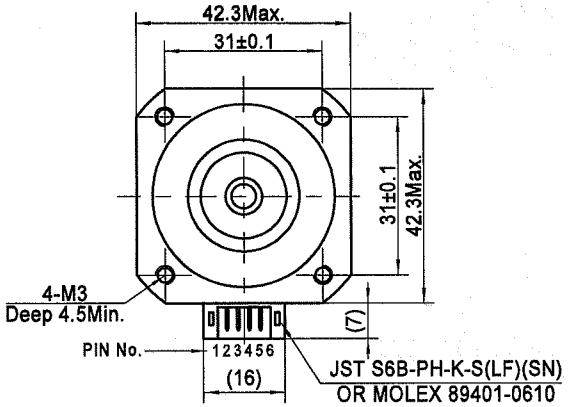

接线图

Wiring Diagram

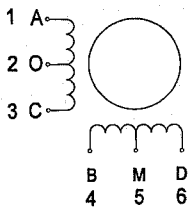

励磁顺序vs.旋转方向

Exciting Sequence vs. Direction of Rotation

STEP	A	B	C	D	O	M
1	−	−			+	+
2		−	−		+	+
3			−	−	+	+
4	−			−	+	+

CCW

CW

从安装面看为顺时针方向

Clockwise view from mouting side

规格 Specifications

1. 相数 Number of Phase	4
2. 步距角 Step Angle	1.8°
3. 额定电压 Rated Voltage	7.52 V
4. 额定电流 Rated Current	0.47 Amp
5. 保持力矩 Holding Torque	0.2 Nm Typ.(Two phase on/rated current)
6. 相电阻 Phase Resistance	16 Ω±10%(20°C)
7. 相电感 Phase Inductance	8.5 mH±20%(1kHz 1V rms)
8. 转子惯量 Rotor Inertia	38 gcm^2
9. 电机重量 Motor Weight	0.21kg
10. 绝缘等级 Insulation Class	B(130°C)

铭牌 Label Detail

MOONS' STEPPING MOTOR
TYPE 17HD0050-18
XXXXXXXX YY/MM/DD

Work Order 加工单号

Date Format 日期格式

保 密

REV.	版本记录 REVISION RECORD	DATE
B	CHANGE SHAFT AND MOTOR BODY LENGTH AND FRONT ENDCAPS 1	2016.10.18
A	原始版本 Original revision	2016.07.26

Unit: mm
第一角画法
FIRST ANGLE METHOD
未注线性与角度尺寸公差
Tolerances for linear and angular dimensions without individual tolerance indications
GB/T 1804-m eqv ISO 2768-1 : m
未注形状与位置尺寸公差
Geometrical tolerance for features without individual tolerance indications
GB/T 1184-K eqv ISO 2768-2 : K

UNLESS OTHERWISE SPECIFIED

NAMES	SIGNATURE	DATE
批准 Approve		10.19
标准化 Standard		10.19
工艺 Technology		10.19
审核 Check		10.19
设计 Design	杨广志	2016.10.18

MOONS' Hybrid Stepping Motor

Shanghai Moons' Electric Co., Ltd.

This ducument is released for information only. Its reproduction in whole or in part or its dissemination to third parties is prohibited. All trademarks and registered trademarks appearing on this document are the property of their respective owners.

Type: 17HD0050-18 | Rev.B | SCALE 1:1 | Sheet 1 of 1