REV	DATE	CHANGE DESCRIPTION
A	2019/03/22	NEW RELEASE
B	2019/12/02	UPDATE PRINT TEXT (5.9 CHANGE OF 5.8-8.5)

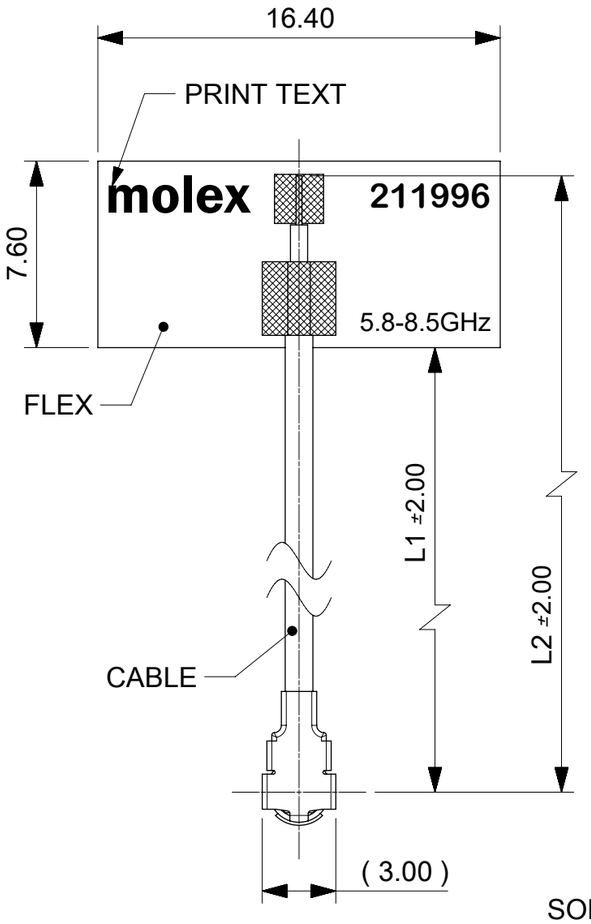

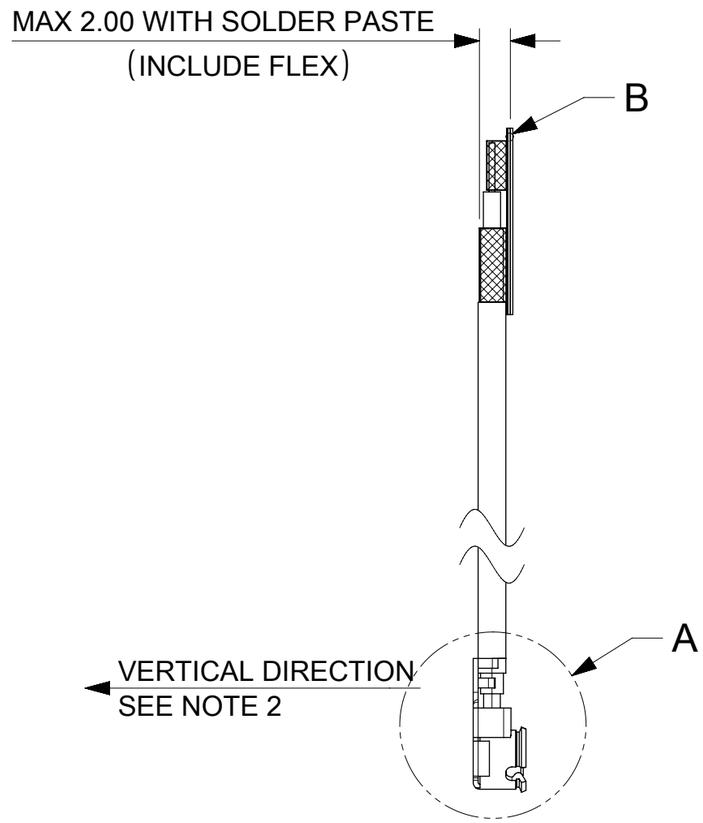

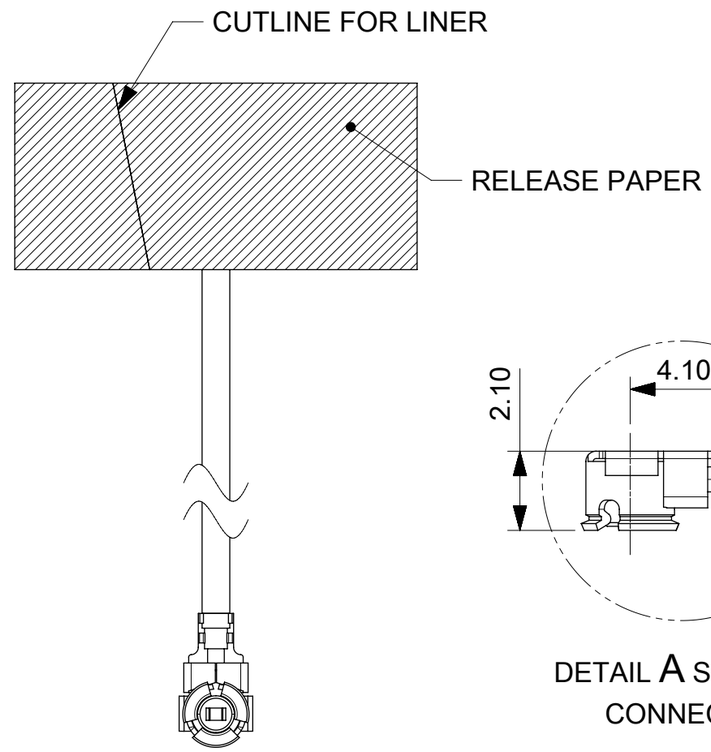

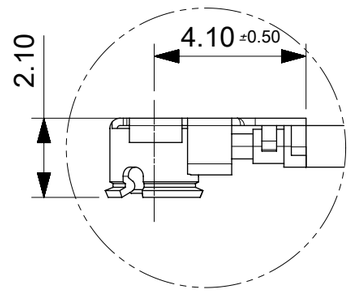

DETAIL A SCALE 6:1
CONNECTOR

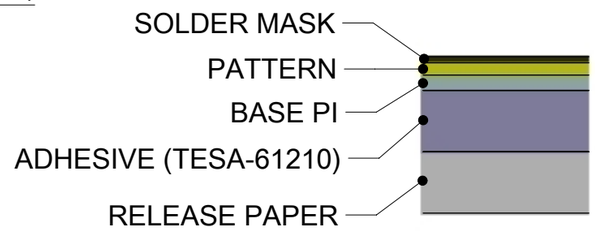

DETAIL B SCALE 100:1
FLEX LAYER

ITEM	MATERIAL NO.	"L1"-LENGTH	"L2"-LENGTH
1	2119960050	43 mm	50 mm
2	2119960100	93 mm	100 mm
3	2119960150	143 mm	150 mm
4	2119960200	193 mm	200 mm
5	2119960250	243 mm	250 mm
6	2119960300	293 mm	300 mm

NOTES:
1. MATERIAL:FLEX SIZE 16.4*7.6 mm
   CABLE:∅1.13 mm
   CONNECTOR:OD1.13 RF 2.5H U.FL CONNECTOR-PLUG GOLD PLATED
   (IPEX MHF-I COMPATIBLE)
2. FOR PULL TEST, CAN NOT LIFT UP IN THE VERTICAL DIRECTION.
3. SOLDER MASK COLOR:BLACK.
4. PRINT TEXT COLOR:WHITE.
5. ADHESIVE MATERIAL:TESA-61210 100um.
6. THE CONNECTOR WILL BE PROTECTED WITH A CAP

DOCUMENT STATUS	P1	RELEASE DATE	2019/12/09 02:20:08

SYMBOLS: E = 0, C = 0, F = 0, S = 0, ▼ = 0, C = 0, ☒ = 0, ■ = 0, ▽ = 0

THIS DRAWING CONTAINS INFORMATION THAT IS PROPRIETARY TO MOLEX ELECTRONIC TECHNOLOGIES, LLC AND SHOULD NOT BE USED WITHOUT WRITTEN PERMISSION

DIMENSION UNITS	SCALE
mm	2:1

GENERAL TOLERANCES (UNLESS SPECIFIED)

ANGULAR TOL	±	°
4 PLACES	±	
3 PLACES	±	0.2
2 PLACES	±	0.25
1 PLACE	±	0.3
0 PLACES	±	0.5

DRAFT WHERE APPLICABLE MUST REMAIN WITHIN DIMENSIONS

CURRENT REV DESC:

EC NO: 626809
DRWN: KCHENG06 2019/12/02
CHK'D: XJSONG 2019/12/09
APPR: XJSONG 2019/12/09

INITIAL REVISION:
DRWN: KCHENG06 2019/03/22
APPR: XJSONG 2019/04/04

THIRD ANGLE PROJECTION | DRAWING: A3-SIZE | SERIES: 211996

molex

5.8-8.5GHZ FLEXIBLE ANTENNA

PRODUCT CUSTOMER DRAWING

DOCUMENT NUMBER	DOC TYPE	DOC PART	REVISION
2119960100	PSD	000	B

MATERIAL NUMBER	CUSTOMER	SHEET NUMBER
2119960100	GENERAL MARKET	1 OF 1

FORMAT: tb-prod-A3
REVISION: H
DATE: 2018/01/18