PART NO.	LENGTH
848491027	8M
848491017	5M

REV	DATE	ECN NO.	APPVD BY	REL BY
A	12-26-00	UM2001-0190 PROD. REL.		

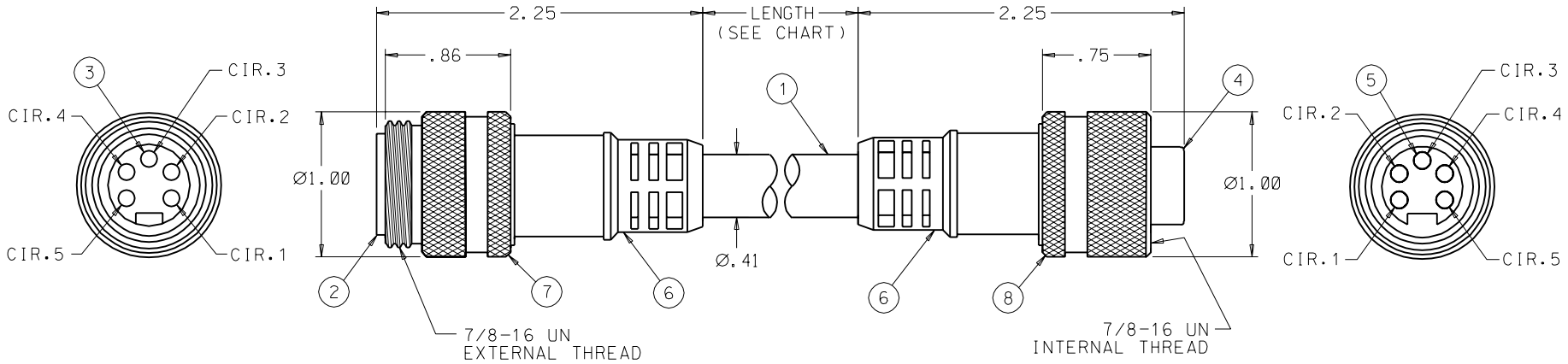

ITEM	QTY	DESCRIPTION	MATERIAL/FINISH
8	1	CPLG. RING, INT. THD.	BRASS/BLACK ANODIZED
7	1	CPLG. RING, EXT. THD.	BRASS/BLACK ANODIZED
6	2	MOLDED BODY	PVC/COLOR:BLUE
5	5	CONTACT, SOCKET	CU ALLOY/GOLD PLATED
4	1	INSERT, SOCKET, 5/C	PVC/COLOR:YELLOW
3	5	CONTACT, PIN	CU ALLOY/GOLD PLATED
2	1	INSERT, PIN, 5/C	PVC/COLOR:YELLOW
1	SEE CHART	CABLE, THICK (TRUNK)	PVC JACKET/COLOR:BLUE

P1		P2
1	DRAIN	1
2	RED	2
3	BLK	3
4	WHT	4
5	BLU	5

WIRING DIAGRAM

QUALITY SYMBOLS
MAJOR ▼ =
CRITICAL (C) =
SPC (S) =

UNLESS SPECIFIED:
ALL DIMENSIONS IN INCHES
GENERAL TOLERANCES:
3 PLACE ±.005
2 PLACE ±.01
ANGULAR ±2°

Uni-Mate CAGE CODE
58967

SCALE ---
DWG SIZE B
THIRD ANGLE PROJECTION
REVISE ON CAD ONLY

DRAWN BY & DATE GF 12-26-00
CHECKED BY & DATE
APPROVED BY & DATE

TITLE:
MINI-C, PLUG, MALE/FEMALE,
THICK (TRUNK) DEVICE NET

MOLEX INCORPORATED
Orange, CA 92868

PART NO. SEE CHART
DRAWING NO. SD-84849-1027
SHEET NO. 1 OF 1

THIS DRAWING CONTAINS INFORMATION THAT IS PROPRIETARY TO MOLEX INCORPORATED AND SHOULD NOT BE USED WITHOUT WRITTEN PERMISSION.

REV A