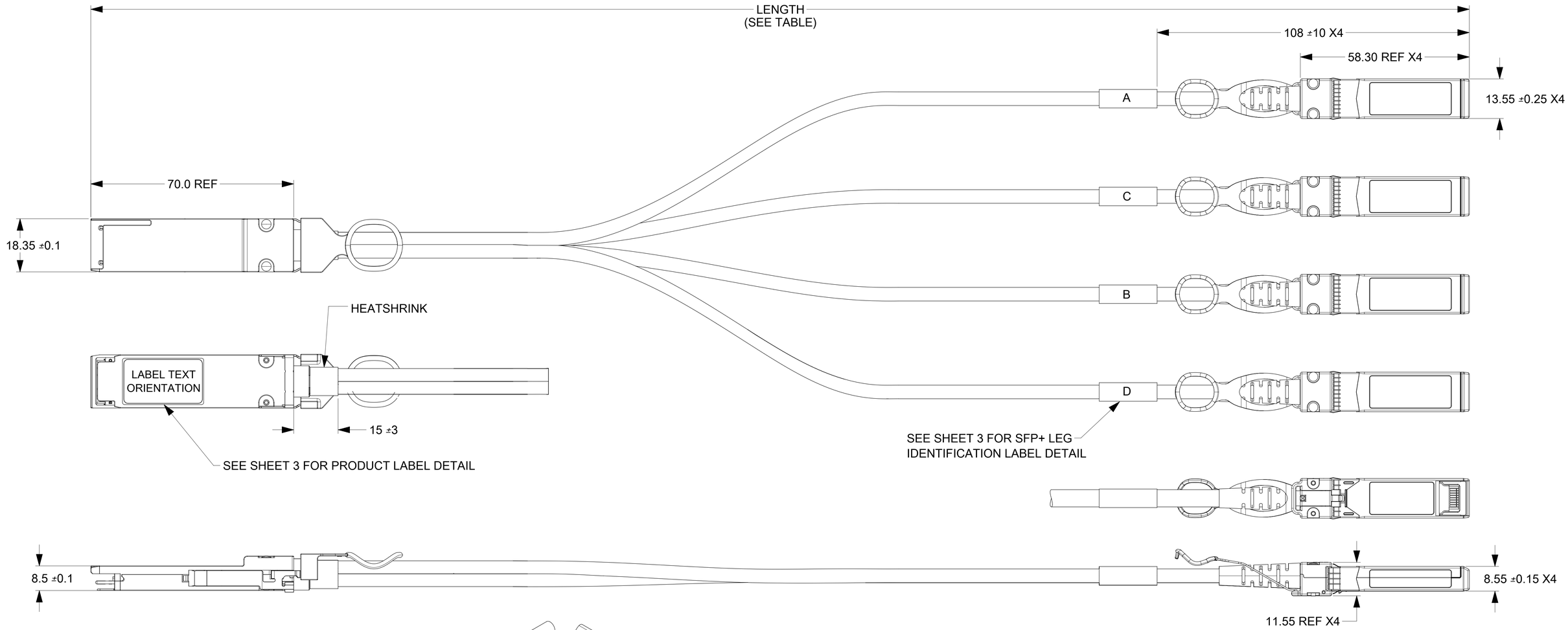

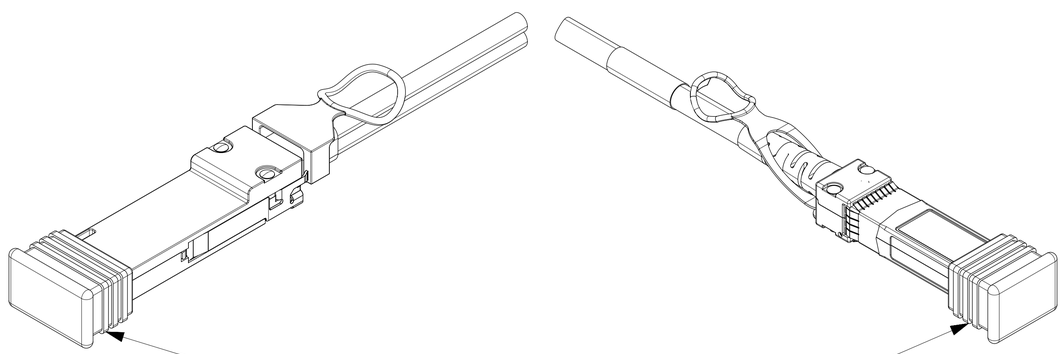

NOTES:

1. MATERIALS:
   - BACKSHELLS - ZINC DIE CAST WITH BRIGHT NICKEL PLATING
   - DELATCH - STAINLESS STEEL AND OVERMOLDED NYLON
   - PCB - FR4
   - RIVETS - STAINLESS STEEL
2. IMPEDANCE - 100 OHMS DIFFERENTIAL
3. RoHS COMPLIANT, NO EXEMPTIONS

DOCUMENT STATUS	P1	RELEASE DATE	2019/10/07 16:15:12

SYMBOLS	
A	= 0
E	= 0
F	= 0
S	= 0
	= 0
C	= 0
	= 0
	= 0
V	= 0

THIS DRAWING CONTAINS INFORMATION THAT IS PROPRIETARY TO MOLEX ELECTRONIC TECHNOLOGIES, LLC AND SHOULD NOT BE USED WITHOUT WRITTEN PERMISSION

DIMENSION UNITS	SCALE
mm	
GENERAL TOLERANCES (UNLESS SPECIFIED)	
ANGULAR TOL	± 1.0 °
4 PLACES	±
3 PLACES	±
2 PLACES	± 0.13
1 PLACE	± 0.25
0 PLACES	±
DRAFT WHERE APPLICABLE MUST REMAIN WITHIN DIMENSIONS	

CURRENT REV DESC: UPDATED DRW VIEWS

EC NO: 625203
DRWN: JKUMARSARAFS 2019/09/27
CHK'D: JKUMARSARAFS 2019/10/07
APPR: KNAGANNA 2019/10/07

INITIAL REVISION:
DRWN: EMEDINA02 2017/03/01
APPR: ARAYBURN 2017/03/14

THIRD ANGLE PROJECTION | DRAWING: D-SIZE | SERIES: 74764

molex

QSFP+ TO (4) SFP+ 10G PASSIVE CBL ASSY

PRODUCT CUSTOMER DRAWING

DOCUMENT NUMBER	DOC TYPE	DOC PART	REVISION
747640001	PSD	000	P1

MATERIAL NUMBER	CUSTOMER	SHEET NUMBER
SEE PN TABLE	GENERAL MARKET	1 OF 3

WIRING DIAGRAM				
QSFP+		SFP+		
PAD	SIGNAL	SIGNAL	PAD	PLUG
38	GND	- - - -	GND	
37	TX1-	- - - >	RD-	12
36	TX1+	- - - >	RD+	13
16	GND	- - - -	GND	
17	RX1+	< - - -	TD+	18
18	RX1-	< - - -	TD-	19
04	GND	- - - -	GND	
02	TX2-	- - - >	RD-	12
03	TX2+	- - - >	RD+	13
23	GND	- - - -	GND	
22	RX2+	< - - -	TD+	18
21	RX2-	< - - -	TD-	19
35	GND	- - - -	GND	
34	TX3-	- - - >	RD-	12
33	TX3+	- - - >	RD+	13
13	GND	- - - -	GND	
14	RX3+	< - - -	TD+	18
15	RX3-	< - - -	TD-	19
07	GND	- - - -	GND	
05	TX4-	- - - >	RD-	12
06	TX4+	- - - >	RD+	13
26	GND	- - - -	GND	
25	RX4+	< - - -	TD+	18
24	RX4-	< - - -	TD-	19

A
B
C
D

QSFP+

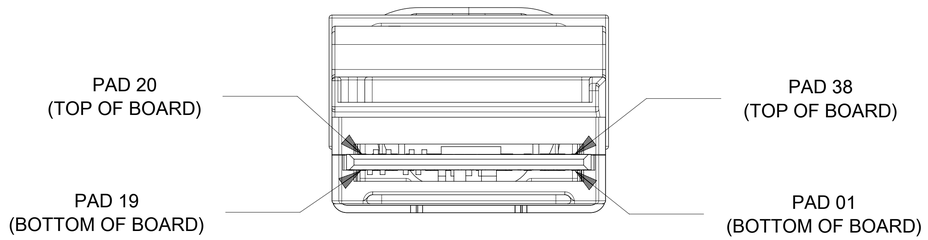

SFP+

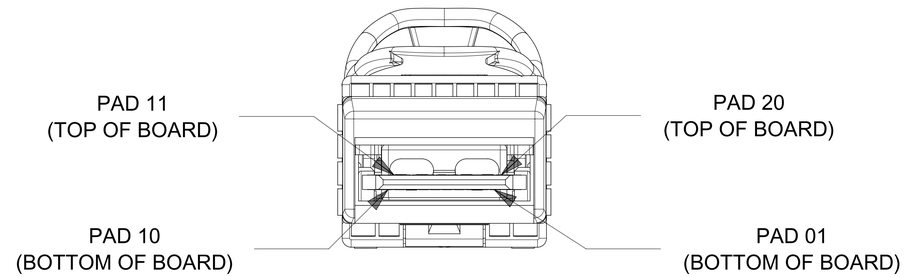

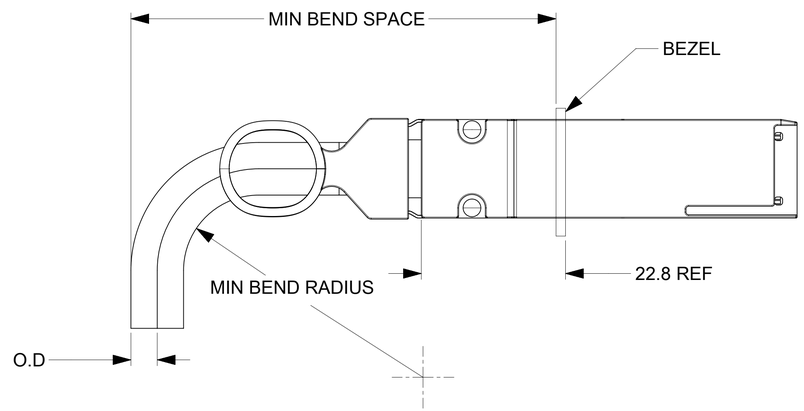

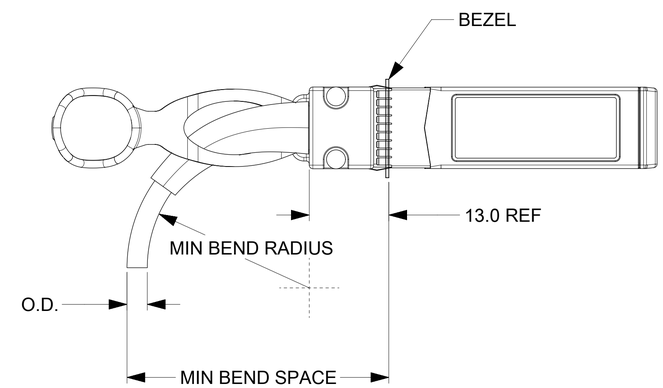

LOW SPEED SIGNALS	
QSFP+	
PAD	SIGNAL
08	ModSelL
09	ResetL
10	VccRx
11	SCL
12	SDA
27	ModPrsL
28	IntL
29	VccTx
30	Vcc1
31	LPMode

LOW SPEED SIGNALS	
SFP+	
PAD	SIGNAL
02	Tx_Fault
03	Tx_Disable
04	SDA
05	SCL
06	Mod_ABS
07	RS0
08	Rx_LOS
09	RS1
15	VccR
16	VccT

CABLE AWG	OD OF CBL BUNDLE	MIN BEND RADIUS (mm)	MIN BEND SPACE (mm)
30	8.4	21	52
28	9.4	23.5	55
26	10.4	26	59

CABLE AWG	OD	MIN BEND RADIUS (mm)	MIN BEND SPACE (mm)
30	4.2	21	38
28	4.7	23.5	41
26	5.2	26	44

DOCUMENT STATUS	P1	RELEASE DATE	2019/10/07 16:15:12

SYMBOLS

= 0	
= 0	
= 0	
= 0	
= 0	
= 0	
= 0	
= 0	
= 0	

THIS DRAWING CONTAINS INFORMATION THAT IS PROPRIETARY TO MOLEX ELECTRONIC TECHNOLOGIES, LLC AND SHOULD NOT BE USED WITHOUT WRITTEN PERMISSION

DIMENSION UNITS	SCALE
mm	
GENERAL TOLERANCES (UNLESS SPECIFIED)	
ANGULAR TOL	± 1.0 °
4 PLACES	±
3 PLACES	±
2 PLACES	± 0.13
1 PLACE	± 0.25
0 PLACES	±

DRAFT WHERE APPLICABLE MUST REMAIN WITHIN DIMENSIONS

CURRENT REV DESC: UPDATED DRW VIEWS

EC NO: 625203
DRWN: JKUMARSARAFS 2019/09/27
CHK'D: JKUMARSARAFS 2019/10/07
APPR: KNAGANNA 2019/10/07

INITIAL REVISION:
DRWN: EMEDINA02 2017/03/01
APPR: ARAYBURN 2017/03/14

molex

QSFP+ TO (4) SFP+ 10G PASSIVE CBL ASSY

PRODUCT CUSTOMER DRAWING

THIRD ANGLE PROJECTION	DRAWING	SERIES	MATERIAL NUMBER	CUSTOMER	SHEET NUMBER
	D-SIZE	74764	SEE PN TABLE	GENERAL MARKET	2 OF 3

DOCUMENT NUMBER	DOC TYPE	DOC PART	REVISION
747640001	PSD	000	P1

PRODUCT LABEL DETAIL

```
P/N  SEE TABLE FOR PN
X.XM  = LENGTH AS SHOWN IN TABLE
XXAWG = AWG SIZE

YDDDLSSSS
       Y = LAST DIGIT OF THE YEAR
     DDD = DAY OF THE YEAR
       L = LOCATION
           1 = US
           2 = MEXICO
           3 = CHINA
           4 = PHILIPPINES
    SSSS = (0001-9999)
```

PART NUMBER TABLE

MOLEX P/N	LENGTH	TOL.	AWG
747641031	0.25M	±0.03M	30
747641051	0.5M	±0.03M	30
747641081	0.75M	±0.03M	30
747641101	1.0M	±0.05M	30
747641131	1.25M	±0.05M	30
747641053	1.5M	±0.05M	30
747641181	1.75M	±0.05M	30
747641201	2.0M	±0.05M	30
747641251	2.5M	±0.05M	30
747641301	3.0M	±0.05M	30
747641401	4.0M	±0.05M	30
747642201	2.0M	±0.05M	28
747642301	3.0M	±0.05M	28
747642331	3.3M	±0.05M	28
747642351	3.5M	±0.05M	28
747642371	3.7M	±0.05M	28
747642401	4.0M	±0.05M	28
747642501	5.0M	±0.05M	28
747643601	6.0M	±0.05M	26

SFP LEG IDENTIFICATION LABEL DETAIL

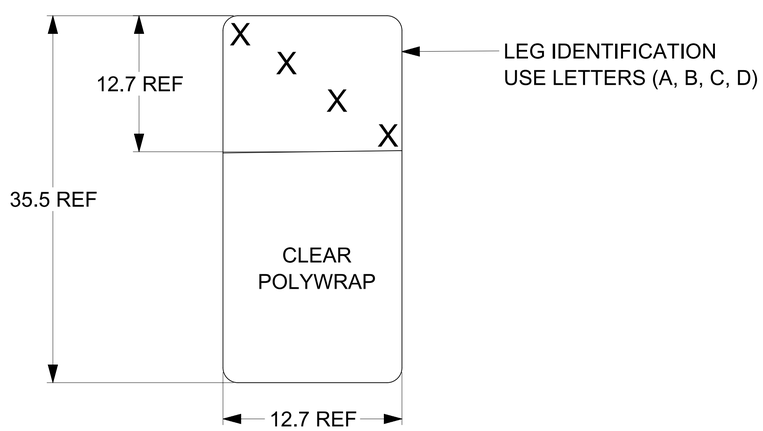

THIS DRAWING CONTAINS INFORMATION THAT IS PROPRIETARY TO MOLEX ELECTRONIC TECHNOLOGIES, LLC AND SHOULD NOT BE USED WITHOUT WRITTEN PERMISSION

SYMBOLS	DIMENSION UNITS	SCALE
= 0	mm	
= 0	GENERAL TOLERANCES (UNLESS SPECIFIED)	
= 0	ANGULAR TOL ± 1.0 °	
= 0	4 PLACES ±	
= 0	3 PLACES ±	
= 0	2 PLACES ± 0.13	
= 0	1 PLACE ± 0.25	
= 0	0 PLACES ±	
= 0	DRAFT WHERE APPLICABLE MUST REMAIN WITHIN DIMENSIONS	
= 0		

CURRENT REV DESC: UPDATED DRW VIEWS

EC NO: 625203
DRWN: JKUMARSARAFS 2019/09/27
CHK'D: JKUMARSARAFS 2019/10/07
APPR: KNAGANNA 2019/10/07

INITIAL REVISION:
DRWN: EMEDINA02 2017/03/01
APPR: ARAYBURN 2017/03/14

THIRD ANGLE PROJECTION | DRAWING: D-SIZE | SERIES: 74764

molex

QSFP+ TO (4) SFP+ 10G PASSIVE CBL ASSY

PRODUCT CUSTOMER DRAWING

DOCUMENT NUMBER	DOC TYPE	DOC PART	REVISION
747640001	PSD	000	P1

MATERIAL NUMBER	CUSTOMER	SHEET NUMBER
SEE PN TABLE	GENERAL MARKET	3 OF 3

DOCUMENT STATUS	P1	RELEASE DATE	2019/10/07 16:15:12