Crystal Units
Surface Mount Type CX2016SB

KYOCERA

2.0×1.6mm for Consumer Products

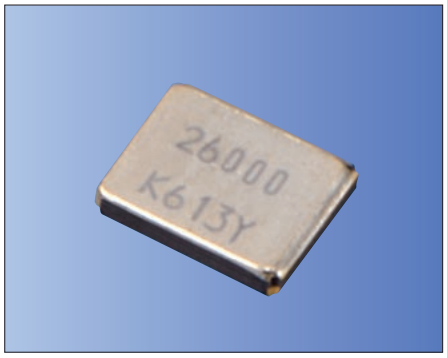

Pb Free RoHS Compliant

Features

- Crystal unit for Consumer Products
- Ultra-miniature and low profile (2.0×1.6×0.45mm)
- Ceramic package
- A lead free product
- Reflow compatible

Applications

- Digital Electronics
- Consumer Products

How to Order

CX2016SB 27000 □□ □ □ □ □□
① ② ③ ④ ⑤ ⑥ ⑦

① Series ② Frequency

③ Load Capacitance

B0	6 pF	—
D0	8 pF	Std.

④ Frequency Stability

P	±50×10⁻⁶	Std.

⑤Operating Temp. Range ⑥Frequency Temp. Stability

ES	−10 to +70°C	±50×10⁻⁶	Std.

⑦ Individual Specification... Std.Spec. as "ZZ"

Specifications

Item	Symbol	Specification	Units	Remarks
Frequency Range	f_{nom}	20000 to 60000	kHz	
Overtone Order	OT	Fundamental	—	
Load Capacitance	CL	8	pF	
Frequency Stability	f_{tol}	±50	$\times 10^{-6}$	@ 25°C
Motional Series Resistance	R1	Table 1	ohm	
Drive Level	DL	Table 2	μW	
Operating Temp. Range	T_{use}	−10 to +70	°C	
Storage Temp. Range	T_{stg}	−40 to +85	°C	
Frequency Temp. Characteristics	f_{tem}	±50	$\times 10^{-6}$	ref.@ 25°C over operating temperature range

* Please contact us for other specifications.

Typical Frequencies and Part Numbers

Frequency (kHz)	Standard Part Number
20000.000	CX2016SB20000D0PESZZ
24000.000	CX2016SB24000D0PESZZ
24576.000	CX2016SB24576D0PESZZ
26000.000	CX2016SB26000D0PESZZ
27000.000	CX2016SB27000D0PESZZ
27120.000	CX2016SB27120D0PESZZ
30000.000	CX2016SB30000D0PESZZ
32000.000	CX2016SB32000D0PESZZ
36000.000	CX2016SB36000D0PESZZ
38400.000	CX2016SB38400D0PESZZ
40000.000	CX2016SB40000D0PESZZ
48000.000	CX2016SB48000D0PESZZ
54000.000	CX2016SB54000D0PESZZ

Table1 Motional Series Resistance

Frequency Range	Motional Series Resistance	Units
20000 to 25999kHz	200 max.	ohm
26000 to 39999kHz	100 max.	
40000 to 60000kHz	50 max.	

Table2 Level of Drive

Frequency Range	Drive Level	Units
20000 to 60000kHz	10 (100 max.)	μW

Dimensions

(Unit: mm)

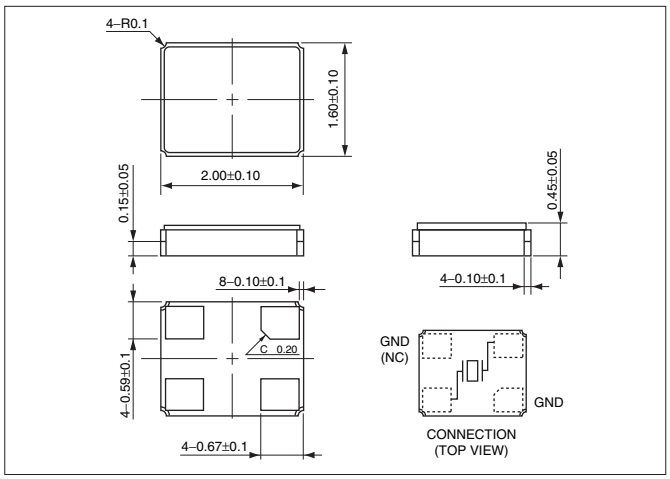

Recommended Land Pattern

(Unit: mm)

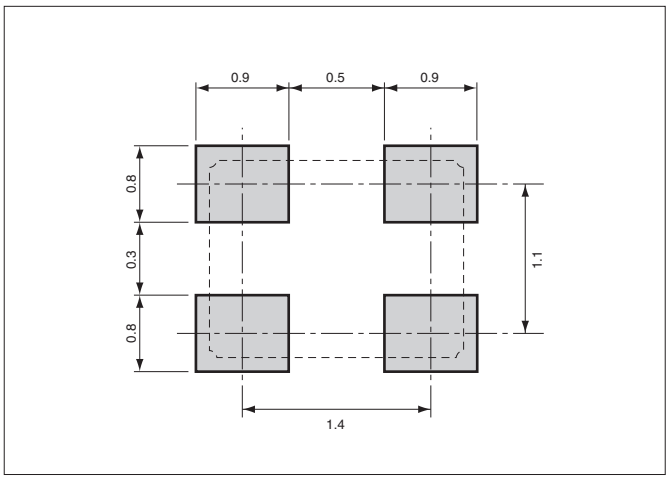

Downloaded from Arrow.com.

Crystal Units
Surface Mount Type CX2016SB

KYOCERA

2.0×1.6mm for Mobile Communications

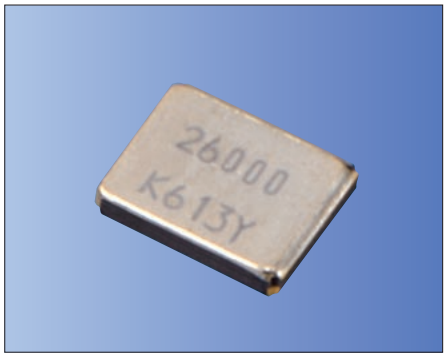

Pb Free RoHS Compliant

Features

- Reference frequency for telecommunication systems
- Reflow compatible
- Using ceramic package resulting in high reliability
- Small and low profile

Applications

- Mobile Communications, Bluetooth, Wireless LAN

How to Order

CX2016SB 26000 □□ □ □ □ □□
① ② ③ ④ ⑤ ⑥ ⑦

① Series ② Frequency

③ Load Capacitance

B0	6 pF	—
D0	8 pF	Std.

④ Frequency Stability

F	±10×10⁻⁶	Std.
G	±15×10⁻⁶	—

⑤Operating Temp. Range ⑥Frequency Temp. Stability

FF	−20 to +70°C	±10×10⁻⁶	—
LJ	−30 to +85°C	±15×10⁻⁶	Std.

⑦ Individual Specification... Std.Spec. as "ZZ"

Specifications

Item	Symbol	Specification	Units	Remarks
Frequency Range	f_{nom}	26000 to 60000	kHz	
Overtone Order	OT	Fundamental	—	
Load Capacitance	CL	8	pF	
Frequency Stability	f_{tol}	±10	$\times 10^{-6}$	@ 25°C
Motional Series Resistance	R1	Table 1	ohm	
Drive Level	DL	Table 2	μW	
Operating Temp. Range	T_{use}	−30 to +85	°C	
Storage Temp. Range	T_{stg}	−40 to +85	°C	
Frequency Temp. Characteristics	f_{tem}	±15	$\times 10^{-6}$	ref.@ 25°C over operating temperature range

∗ Please contact us for other specifications.

Typical Frequencies and Part Numbers

Frequency (kHz)	Standard Part Number
26000.000	CX2016SB26000D0FLJZZ
27120.000	CX2016SB27120D0FLJZZ
32000.000	CX2016SB32000D0FLJZZ
36000.000	CX2016SB36000D0FLJZZ
38400.000	CX2016SB38400D0FLJZZ
40000.000	CX2016SB40000D0FLJZZ
44000.000	CX2016SB44000D0FLJZZ
54000.000	CX2016SB54000D0FLJZZ

Table1 Motional Series Resistance

Frequency Range	Motional Series Resistance	Units
26000 to 39999kHz	100 max.	ohm
40000 to 60000kHz	50 max.	

Table2 Level of Drive

Frequency Range	Drive Level	Units
26000 to 60000kHz	10 (100 max.)	μW

Dimensions

(Unit: mm)

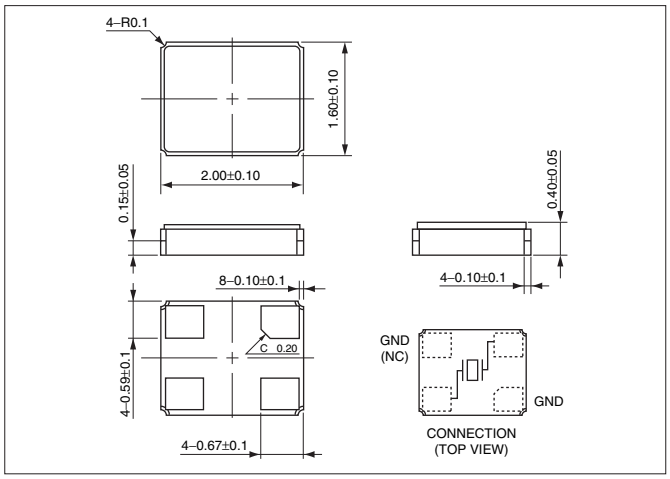

Recommended Land Pattern

(Unit: mm)

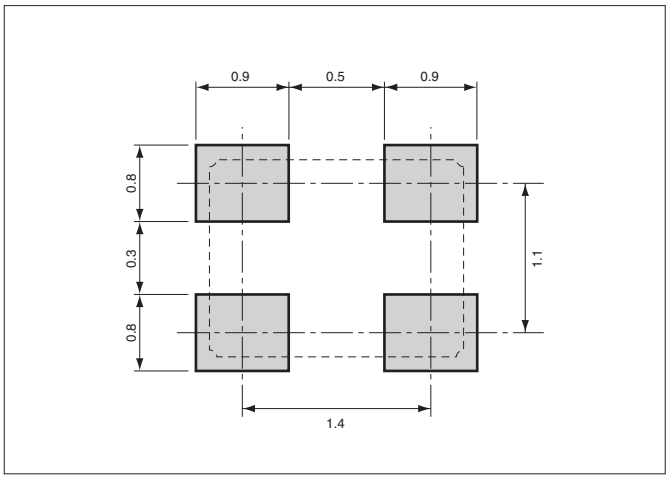

Downloaded from Arrow.com.

Crystal Units
Surface Mount Type CX2520SB

KYOCERA

2.5×2.0mm for Consumer Products

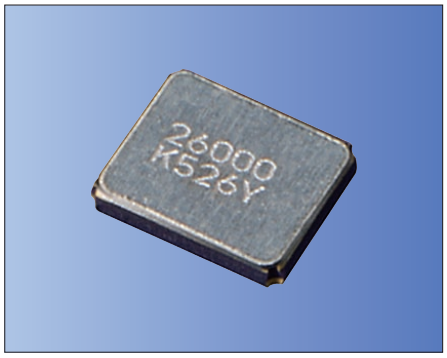

Pb Free RoHS Compliant

Features

- Crystal unit for Consumer Products
- Ultra-miniature and low profile (2.5×2.0×0.45mm)
- Ceramic package
- A lead free product
- Reflow compatible

Applications

- Digital Electronics
- Consumer Products

How to Order

CX2520SB 13560 □□ □ □ □ □□
① ② ③ ④ ⑤ ⑥ ⑦

① Series ② Frequency

③ Load Capacitance

B0	6 pF	—
D0	8 pF	Std.

④ Frequency Stability

P	±50×10⁻⁶	Std.

⑤Operating Temp. Range ⑥Frequency Temp. Stability

ES	−10 to +70°C	±50×10⁻⁶	Std.

⑦ Individual Specification... Std.Spec. as "ZZ"

Specifications

Item	Symbol	Specification	Units	Remarks
Frequency Range	f_{nom}	13560 to 60000	kHz	
Overtone Order	OT	Fundamental	—	
Load Capacitance	CL	8	pF	
Frequency Stability	f_{tol}	±50	$\times 10^{-6}$	@ 25°C
Motional Series Resistance	R1	Table 1	ohm	
Drive Level	DL	Table 2	μW	
Operating Temp. Range	T_{use}	−10 to +70	°C	
Storage Temp. Range	T_{stg}	−40 to +85	°C	
Frequency Temp. Characteristics	f_{tem}	±50	$\times 10^{-6}$	ref.@ 25°C over operating temperature range

* Please contact us for other specifications.

Typical Frequencies and Part Numbers

Frequency (kHz)	Standard Part Number
13560.000	CX2520SB13560D0PESZZ
16000.000	CX2520SB16000D0PESZZ
18000.000	CX2520SB18000D0PESZZ
20000.000	CX2520SB20000D0PESZZ
24000.000	CX2520SB24000D0PESZZ
26000.000	CX2520SB26000D0PESZZ
27000.000	CX2520SB27000D0PESZZ
27120.000	CX2520SB27120D0PESZZ
30000.000	CX2520SB30000D0PESZZ
32000.000	CX2520SB32000D0PESZZ
33000.000	CX2520SB33000D0PESZZ
33333.000	CX2520SB33333D0PESZZ
40000.000	CX2520SB40000D0PESZZ
48000.000	CX2520SB48000D0PESZZ
54000.000	CX2520SB54000D0PESZZ

Table1 Motional Series Resistance

Frequency Range	Motional Series Resistance	Units
13560 to 15999kHz	300 max.	ohm
16000 to 19999kHz	150 max.	
20000 to 39999kHz	100 max.	
40000 to 60000kHz	50 max.	

Table2 Level of Drive

Frequency Range	Drive Level	Units
13560 to 60000kHz	10 (100 max.)	μW

Dimensions

(Unit: mm)

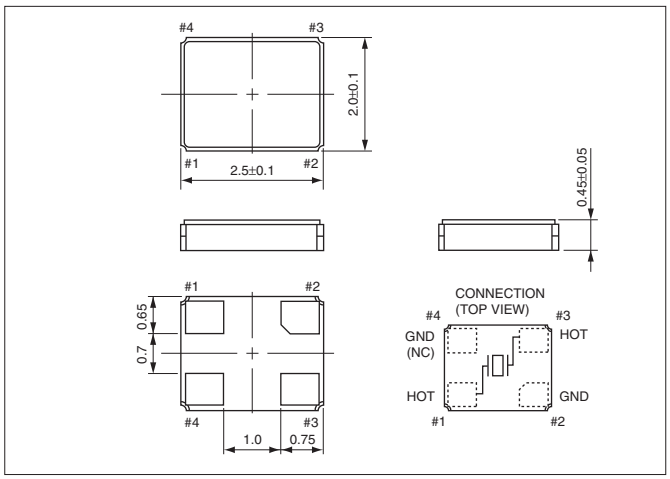

Recommended Land Pattern

(Unit: mm)

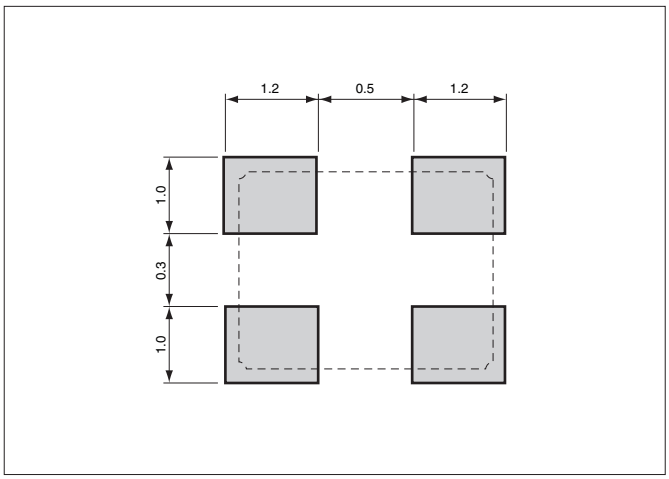

Downloaded from Arrow.com.

Crystal Units
Surface Mount Type CX2520SB

KYOCERA

2.5×2.0mm for Mobile Communications

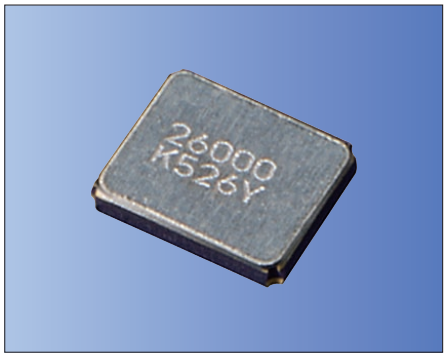

Pb Free RoHS Compliant

Features

- Reference frequency for telecommunication systems
- Reflow compatible
- Using ceramic package resulting in high reliability
- Small and low profile

Applications

- Mobile Communications, Bluetooth, Wireless LAN

How to Order

CX2520SB 26000 □□ □ □ □ □□
① ② ③ ④ ⑤ ⑥ ⑦

① Series ② Frequency

③ Load Capacitance

B0	6 pF	—
D0	8 pF	Std.

④ Frequency Stability

F	±10×10⁻⁶	Std.
G	±15×10⁻⁶	—

⑤Operating Temp. Range ⑥Frequency Temp. Stability

FF	−20 to +70°C	±10×10⁻⁶	—
LJ	−30 to +85°C	±15×10⁻⁶	Std.

⑦ Individual Specification... Std.Spec. as "ZZ"

Specifications

Item	Symbol	Specification	Units	Remarks
Frequency Range	f_{nom}	13560 to 60000	kHz	
Overtone Order	OT	Fundamental	—	
Load Capacitance	CL	8	pF	
Frequency Stability	f_{tol}	±10	$\times 10^{-6}$	@ 25°C
Motional Series Resistance	R1	Table 1	ohm	
Drive Level	DL	Table 2	μW	
Operating Temp. Range	T_{use}	−30 to +85	°C	
Storage Temp. Range	T_{stg}	−40 to +85	°C	
Frequency Temp. Characteristics	f_{tem}	±15	$\times 10^{-6}$	ref.@ 25°C over operating temperature range

* Please contact us for other specifications.

Typical Frequencies and Part Numbers

Frequency (kHz)	Standard Part Number
13560.000	CX2520SB13560D0FLJZZ
16000.000	CX2520SB16000D0FLJZZ
18000.000	CX2520SB18000D0FLJZZ
19200.000	CX2520SB19200D0FLJZZ
24000.000	CX2520SB24000D0FLJZZ
26000.000	CX2520SB26000D0FLJZZ
27120.000	CX2520SB27120D0FLJZZ
32000.000	CX2520SB32000D0FLJZZ
38400.000	CX2520SB38400D0FLJZZ
40000.000	CX2520SB40000D0FLJZZ
44000.000	CX2520SB44000D0FLJZZ
54000.000	CX2520SB54000D0FLJZZ

Table1 Motional Series Resistance

Frequency Range	Motional Series Resistance	Units
13560 to 15999kHz	300 max.	ohm
16000 to 19999kHz	150 max.	
20000 to 39999kHz	100 max.	
40000 to 60000kHz	50 max.	

Table2 Level of Drive

Frequency Range	Drive Level	Units
13560 to 60000kHz	10 (100 max.)	μW

Dimensions

(Unit: mm)

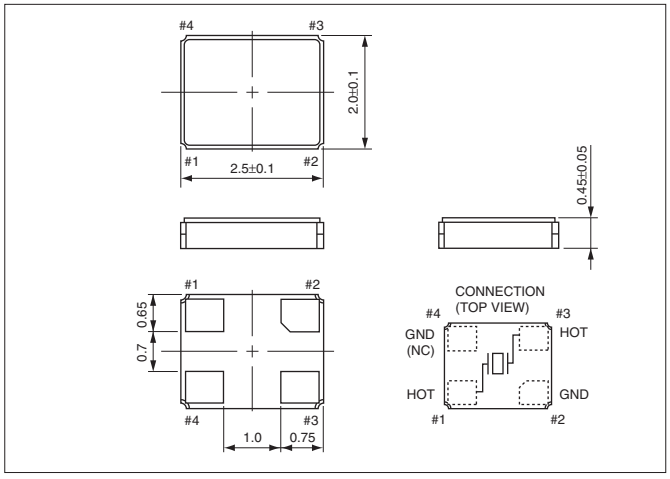

Recommended Land Pattern

(Unit: mm)

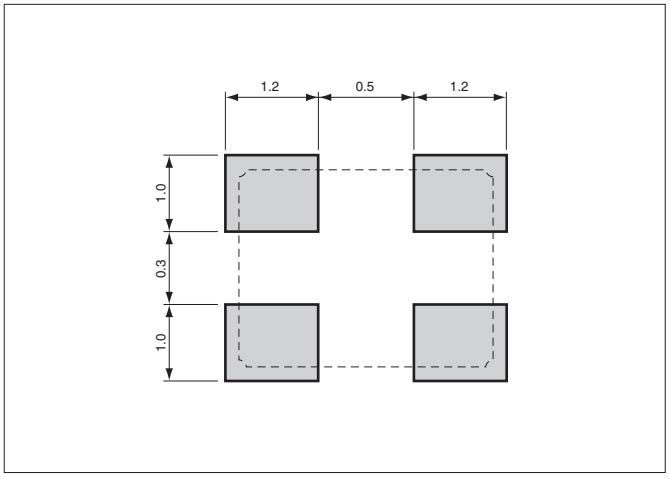

Downloaded from Arrow.com.

Crystal Units
Surface Mount Type CX3225GB

KYOCERA

3.2×2.5mm for Consumer Products

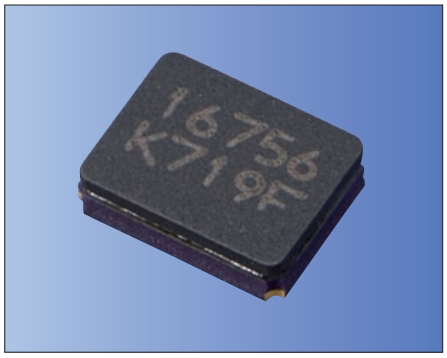

RoHS Compliant

Features

- Crystal unit for Consumer Products
- Small and low profile 0.9mm max. (3.2×2.5×0.8mm)
- Ceramic package
- Product with lead free terminations
- Reflow compatible

Applications

- Digital Electronics
- Consumer Products

How to Order

CX3225GB 27000 □□ □ □ □ □□
① ② ③ ④ ⑤ ⑥ ⑦

① Series ② Frequency

③ Load Capacitance

B0	6 pF	—
D0	8 pF	Std.
F0	10 pF	—

④ Frequency Stability

P	±50×10⁻⁶	Std.

⑤Operating Temp. Range ⑥Frequency Temp. Stability

ES	−10 to +70°C	±50×10⁻⁶	Std.

⑦ Individual Specification... Std.Spec. as "ZZ"

Specifications

Item	Symbol	Specification	Units	Remarks
Frequency Range	f_{nom}	10000 to 54000	kHz	
Overtone Order	OT	Fundamental	—	
Load Capacitance	CL	8	pF	
Frequency Stability	f_{tol}	±50	$\times 10^{-6}$	@ 25°C
Motional Series Resistance	R1	Table 1	ohm	
Drive Level	DL	Table 2	μW	
Operating Temp. Range	T_{use}	−10 to +70	°C	
Storage Temp. Range	T_{stg}	−40 to +85	°C	
Frequency Temp. Characteristics	f_{tem}	±50	$\times 10^{-6}$	ref.@ 25°C over operating temperature range

* Please contact us for other specifications.

Typical Frequencies and Part Numbers

Frequency (kHz)	Standard Part Number
10000.000	CX3225GB10000D0PESZZ
12000.000	CX3225GB12000D0PESZZ
13560.000	CX3225GB13560D0PESZZ
14318.180	CX3225GB14318D0PESZZ
14745.600	CX3225GB14745D0PESZZ
16000.000	CX3225GB16000D0PESZZ
18432.000	CX3225GB18432D0PESZZ
19200.000	CX3225GB19200D0PESZZ
20000.000	CX3225GB20000D0PESZZ
22579.200	CX3225GB22579D0PESZZ
24000.000	CX3225GB24000D0PESZZ
24576.000	CX3225GB24576D0PESZZ
25000.000	CX3225GB25000D0PESZZ
27000.000	CX3225GB27000D0PESZZ
27120.000	CX3225GB27120D0PESZZ
30000.000	CX3225GB30000D0PESZZ
32000.000	CX3225GB32000D0PESZZ
33333.000	CX3225GB33333D0PESZZ
38400.000	CX3225GB38400D0PESZZ
40000.000	CX3225GB40000D0PESZZ
48000.000	CX3225GB48000D0PESZZ
54000.000	CX3225GB54000D0PESZZ

Table1 Motional Series Resistance

Frequency Range	Motional Series Resistance	Units
10000 to 11999kHz	500 max.	ohm
12000 to 13999kHz	300 max.	
14000 to 15999kHz	200 max.	
16000 to 26999kHz	100 max.	
27000 to 54000kHz	50 max.	

Table2 Level of Drive

Frequency Range	Drive Level	Units
10000 to 54000kHz	10 (100 max.)	μW

Dimensions

(Unit: mm)

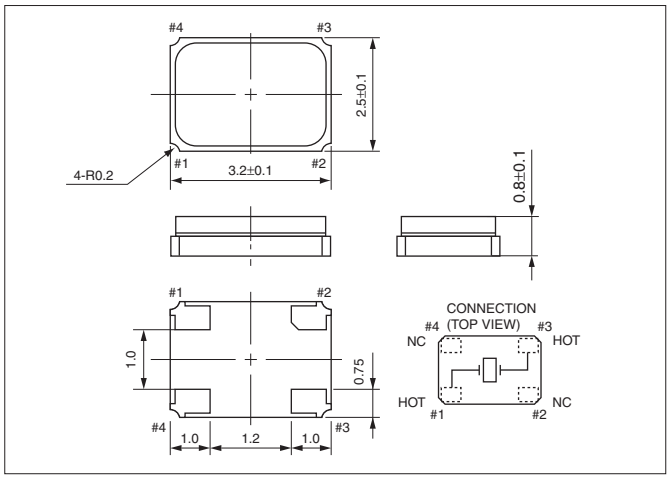

Recommended Land Pattern

(Unit: mm)

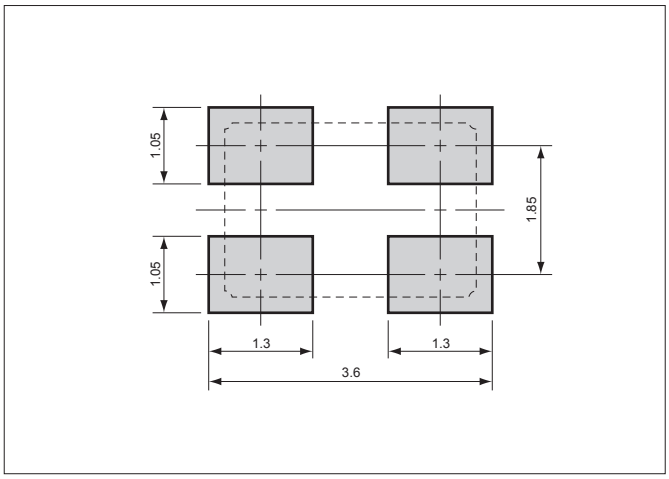

Downloaded from Arrow.com.

Crystal Units
Surface Mount Type CX3225SB (CX-101F)

KYOCERA

3.2×2.5mm for Consumer Products

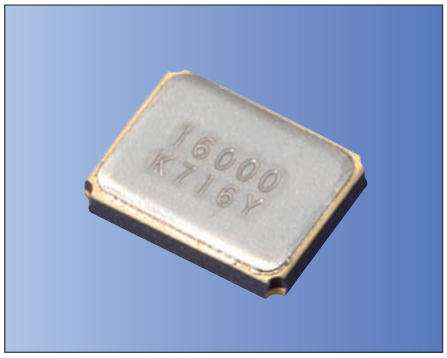

Pb Free RoHS Compliant

Features

- Crystal unit for Consumer Products
- Miniature and low profile (3.2×2.5×0.55mm)
- Ceramic package
- A lead free product
- Reflow compatible

Applications

- Digital Electronics
- Consumer Products
- Car audio and accessories

How to Order

CX3225SB 12000 □□ □ □ □ □□
① ② ③ ④ ⑤ ⑥ ⑦

① Series ② Frequency

③ Load Capacitance

B0	6 pF	—
D0	8 pF	Std.
F0	10 pF	—

④ Frequency Stability

P	±50×10⁻⁶	Std.

⑤Operating Temp. Range ⑥Frequency Temp. Stability

ES	–10 to +70°C	±50×10⁻⁶	Std.

⑦ Individual Specification... Std.Spec. as "ZZ"

Specifications

Item	Symbol	Specification	Units	Remarks
Frequency Range	f_{nom}	12000 to 54000	kHz	
Overtone Order	OT	Fundamental	—	
Load Capacitance	CL	8	pF	
Frequency Stability	f_{tol}	±50	$\times 10^{-6}$	@ 25°C
Motional Series Resistance	R1	Table 1	ohm	
Drive Level	DL	Table 2	μW	
Operating Temp. Range	T_{use}	–10 to +70	°C	
Storage Temp. Range	T_{stg}	–40 to +85	°C	
Frequency Temp. Characteristics	f_{tem}	±50	$\times 10^{-6}$	ref.@ 25°C over operating temperature range

∗ Please contact us for other specifications.

Typical Frequencies and Part Numbers

Frequency (kHz)	Standard Part Number
12000.000	CX3225SB12000D0PESZZ
13560.000	CX3225SB13560D0PESZZ
14318.180	CX3225SB14318D0PESZZ
14745.600	CX3225SB14745D0PESZZ
16000.000	CX3225SB16000D0PESZZ
18432.000	CX3225SB18432D0PESZZ
20000.000	CX3225SB20000D0PESZZ
22579.200	CX3225SB22579D0PESZZ
24000.000	CX3225SB24000D0PESZZ
24576.000	CX3225SB24576D0PESZZ
25000.000	CX3225SB25000D0PESZZ
26000.000	CX3225SB26000D0PESZZ
27000.000	CX3225SB27000D0PESZZ
27120.000	CX3225SB27120D0PESZZ
30000.000	CX3225SB30000D0PESZZ
33000.000	CX3225SB33000D0PESZZ
33333.000	CX3225SB33333D0PESZZ
40000.000	CX3225SB40000D0PESZZ
48000.000	CX3225SB48000D0PESZZ
54000.000	CX3225SB54000D0PESZZ

Table1 Motional Series Resistance

Frequency Range	Motional Series Resistance	Units
12000 to 13999kHz	300 max.	ohm
14000 to 15999kHz	200 max.	
16000 to 26999kHz	100 max.	
27000 to 54000kHz	50 max.	

Table2 Level of Drive

Frequency Range	Drive Level	Units
12000 to 54000kHz	10 (100 max.)	μW

Dimensions

(Unit: mm)

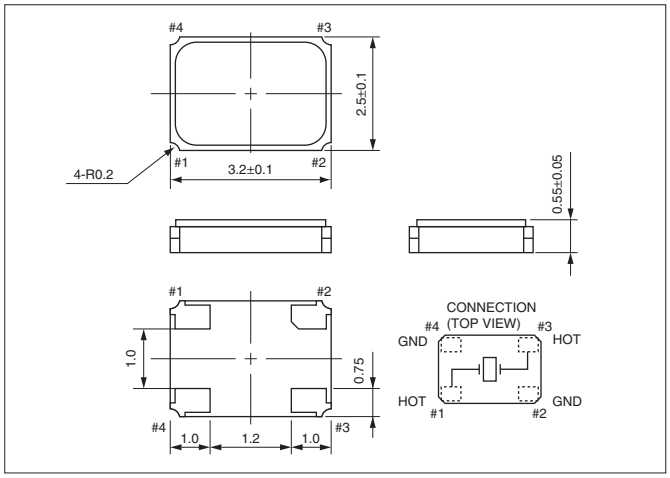

Recommended Land Pattern

(Unit: mm)

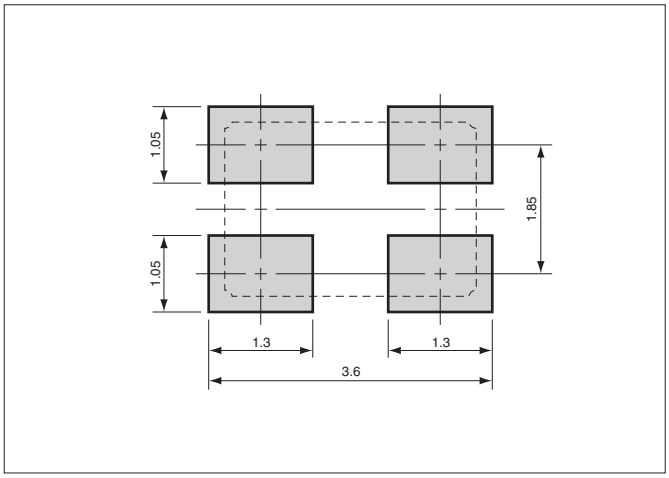

Downloaded from Arrow.com.

Crystal Units
Surface Mount Type CX3225SB (CX-101F)

KYOCERA

3.2×2.5mm for Mobile Communications

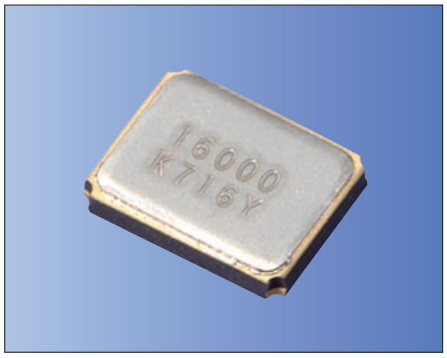

Pb Free RoHS Compliant

Features

- Reference frequency for telecommunication systems
- Reflow compatible
- Using ceramic package resulting in high reliability
- Small and low profile

Applications

- Mobile Communications, Bluetooth, Wireless LAN

How to Order

CX3225SB 26000 □□ □ □ □ □□
① ② ③ ④ ⑤ ⑥ ⑦

① Series ② Frequency

③ Load Capacitance

B0	6 pF	—
D0	8 pF	Std.
F0	10 pF	—

④ Frequency Stability

F	±10×10⁻⁶	Std.
G	±15×10⁻⁶	—

⑤Operating Temp. Range ⑥Frequency Temp. Stability

FF	−20 to +70°C	±10×10⁻⁶	—
LJ	−30 to +85°C	±15×10⁻⁶	Std.

⑦ Individual Specification... Std.Spec. as "ZZ"

Specifications

Item	Symbol	Specification	Units	Remarks
Frequency Range	f_{nom}	12000 to 54000	kHz	
Overtone Order	OT	Fundamental	—	
Load Capacitance	CL	8	pF	
Frequency Stability	f_{tol}	±10	$\times 10^{-6}$	@ 25°C
Motional Series Resistance	R1	Table 1	ohm	
Drive Level	DL	Table 2	μW	
Operating Temp. Range	T_{use}	−30 to +85	°C	
Storage Temp. Range	T_{stg}	−40 to +85	°C	
Frequency Temp. Characteristics	f_{tem}	±15	$\times 10^{-6}$	ref.@ 25°C over operating temperature range

∗ Please contact us for other specifications.

Typical Frequencies and Part Numbers

Frequency (kHz)	Standard Part Number
12000.000	CX3225SB12000D0FLJZZ
13000.000	CX3225SB13000D0FLJZZ
13560.000	CX3225SB13560D0FLJZZ
16000.000	CX3225SB16000D0FLJZZ
19200.000	CX3225SB19200D0FLJZZ
20000.000	CX3225SB20000D0FLJZZ
26000.000	CX3225SB26000D0FLJZZ
32000.000	CX3225SB32000D0FLJZZ
38400.000	CX3225SB38400D0FLJZZ
40000.000	CX3225SB40000D0FLJZZ

Table1 Motional Series Resistance

Frequency Range	Motional Series Resistance	Units
12000 to 13999kHz	300 max.	ohm
14000 to 15999kHz	200 max.	
16000 to 26999kHz	100 max.	
27000 to 54000kHz	50 max.	

Table2 Level of Drive

Frequency Range	Drive Level	Units
12000 to 54000kHz	10 (100 max.)	μW

Dimensions

(Unit: mm)

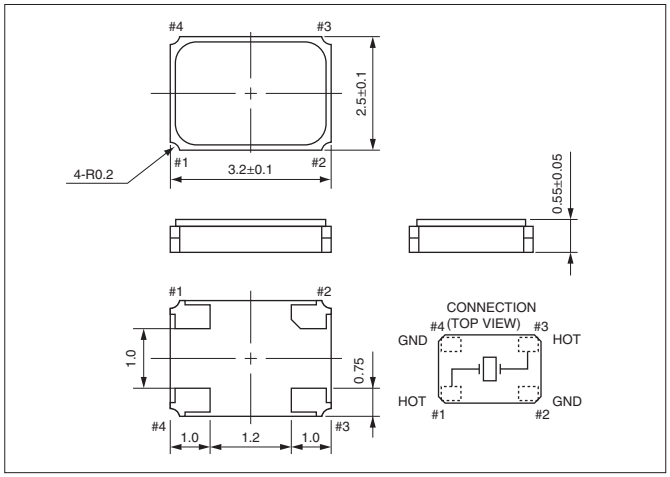

Recommended Land Pattern

(Unit: mm)

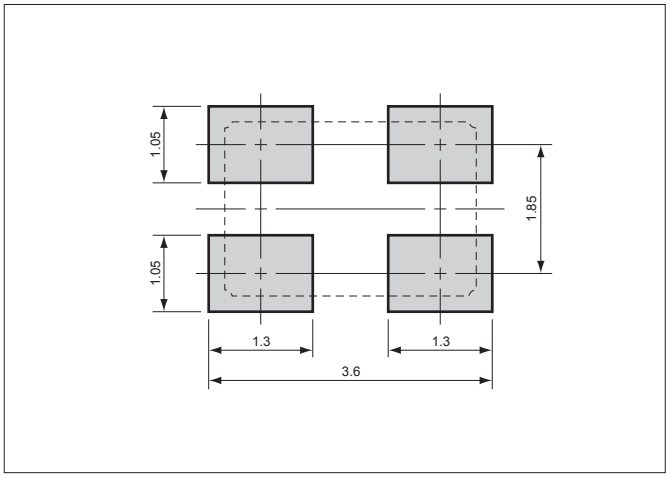

Downloaded from Arrow.com.

Crystal Units
Surface Mount Type CX5032SB (CX-96F)

KYOCERA

5.0×3.2mm for Mobile Communications

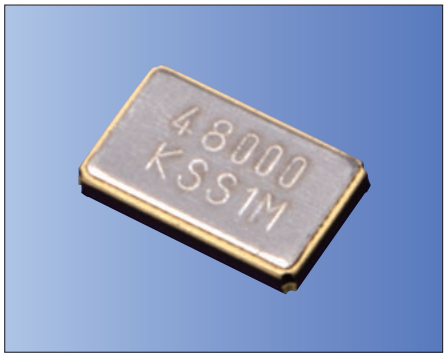

Pb Free RoHS Compliant

Features

- Reference frequency for telecommunication systems
- Reflow compatible
- Using ceramic package resulting in high reliability
- Small and low profile

Applications

- Mobile Communications, Bluetooth, Wireless LAN
- Car audio and accessories

How to Order

CX5032SB 26000 □□ □ □ □ □□
① ② ③ ④ ⑤ ⑥ ⑦

① Series ② Frequency

③ Load Capacitance

D0	8 pF	—
F0	10 pF	Std.
H0	12 pF	—
S0	Series	—

④ Frequency Stability

F	±10×10⁻⁶	Std.
G	±15×10⁻⁶	—

⑤Operating Temp. Range ⑥Frequency Temp. Stability

FF	−20 to +70°C	±10×10⁻⁶	—
LJ	−30 to +85°C	±15×10⁻⁶	Std.

⑦ Individual Specification... Std.Spec. as "ZZ"

Specifications

Item	Symbol	Specification		Units	Remarks
Frequency Range	f_{nom}	9800 to 49999	50 to 120 (MHz)	kHz	
Overtone Order	OT	Fundamental	3rd. Overtone	—	
Load Capacitance	CL	10		pF	
Frequency Stability	f_{tol}	±10		×10⁻⁶	@ 25°C
Motional Series Resistance	R1	Table 1		ohm	
Drive Level	DL	Table 2		μW	
Operating Temp. Range	T_{use}	−30 to +85		°C	
Storage Temp. Range	T_{stg}	−40 to +85		°C	
Frequency Temp. Characteristics	f_{tem}	±15		×10⁻⁶	ref.@ 25°C over operating temperature range

∗ Please contact us for other specifications.

Typical Frequencies and Part Numbers

Frequency (kHz)	Standard Part Number
9843.750	CX5032SB09843F0FLJZZ
12000.000	CX5032SB12000F0FLJZZ
12800.000	CX5032SB12800F0FLJZZ
13000.000	CX5032SB13000F0FLJZZ
13560.000	CX5032SB13560F0FLJZZ
14400.000	CX5032SB14400F0FLJZZ
16000.000	CX5032SB16000F0FLJZZ
19200.000	CX5032SB19200F0FLJZZ
26000.000	CX5032SB26000F0FLJZZ
32000.000	CX5032SB32000F0FLJZZ
40000.000	CX5032SB40000F0FLJZZ
48000.000	CX5032SB48000F0FLJZZ

Table1 Motional Series Resistance

Frequency Range	Motional Series Resistance	Units
9800 to 9999kHz	150 max.	ohm
10000 to 11999kHz	80 max.	
12000 to 25999kHz	50 max.	
26000 to 49999kHz	40 max.	
50 to 120 (MHz)	80 max.	

Table2 Level of Drive

Frequency Range	Drive Level	Units
9800 to 49999kHz	10 (100 max.)	μW
50 to 120 (MHz)		

Dimensions

(Unit: mm)

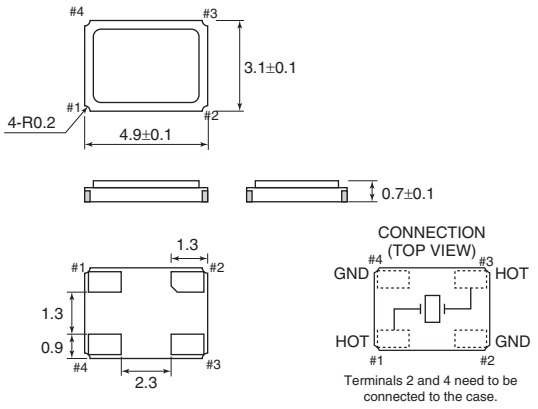

Recommended Land Pattern

(Unit: mm)

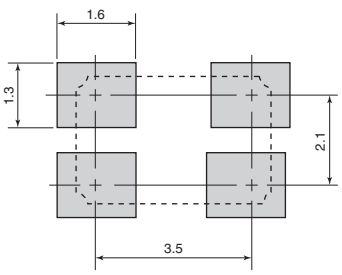

Downloaded from Arrow.com.

Crystal Units
Surface Mount Type CX5032GB (CX-53F)

KYOCERA

5.0×3.2mm for Consumer Products

RoHS Compliant

Features

- Crystal unit for Consumer Products
- Small and low profile (5.0×3.2×1.0mm)
- Ceramic package
- Product with lead free terminations
- Reflow compatible

Applications

- Digital Electronics
- Consumer Products
- Car audio and accessories

How to Order

CX5032GB 27000 □□ □ □ □ □□
① ② ③ ④ ⑤ ⑥ ⑦

① Series ② Frequency

③ Load Capacitance

H0	12 pF	Std.

④ Frequency Stability

P	±50×10⁻⁶	Std.

⑤Operating Temp. Range ⑥Frequency Temp. Stability

ES	−10 to +70°C	±50×10⁻⁶	Std.

⑦ Individual Specification... Std.Spec. as "ZZ"

Specifications

Item	Symbol	Specification	Units	Remarks
Frequency Range	f_{nom}	8000 to 54000	kHz	
Overtone Order	OT	Fundamental	—	
Load Capacitance	CL	12	pF	
Frequency Stability	f_{tol}	±50	$\times 10^{-6}$	@ 25°C
Motional Series Resistance	R1	Table 1	ohm	
Drive Level	DL	Table 2	μW	
Operating Temp. Range	T_{use}	−10 to +70	°C	
Storage Temp. Range	T_{stg}	−40 to +85	°C	
Frequency Temp. Characteristics	f_{tem}	±50	$\times 10^{-6}$	ref.@ 25°C over operating temperature range

∗ Please contact us for other specifications.

Typical Frequencies and Part Numbers

Frequency (kHz)	Standard Part Number
10000.000	CX5032GB10000H0PESZZ
12000.000	CX5032GB12000H0PESZZ
14318.180	CX5032GB14318H0PESZZ
14745.600	CX5032GB14745H0PESZZ
16934.400	CX5032GB16934H0PESZZ
18432.000	CX5032GB18432H0PESZZ
22579.000	CX5032GB22579H0PESZZ
24000.000	CX5032GB24000H0PESZZ
24545.450	CX5032GB24545H0PESZZ
24576.000	CX5032GB24576H0PESZZ
27000.000	CX5032GB27000H0PESZZ
36000.000	CX5032GB36000H0PESZZ
48000.000	CX5032GB48000H0PESZZ
54000.000	CX5032GB54000H0PESZZ

Table1 Motional Series Resistance

Frequency Range	Motional Series Resistance	Units
8000 to 9999kHz	300 max.	ohm
10000 to 11999kHz	200 max.	
12000 to 13999kHz	150 max.	
14000 to 29999kHz	100 max.	
30000 to 54000kHz	50 max.	

Table2 Level of Drive

Frequency Range	Drive Level	Units
8000 to 15999kHz	10 (500 max.)	μW
16000 to 24999kHz	10 (300 max.)	
25000 to 54000kHz	10 (100 max.)	

Dimensions

(Unit: mm)

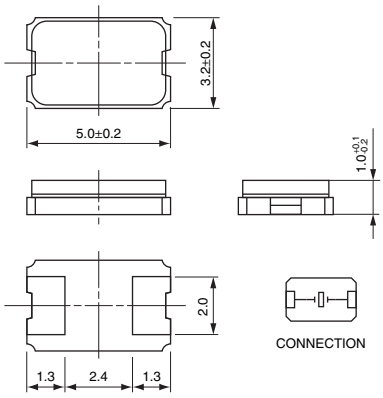

Recommended Land Pattern

(Unit: mm)

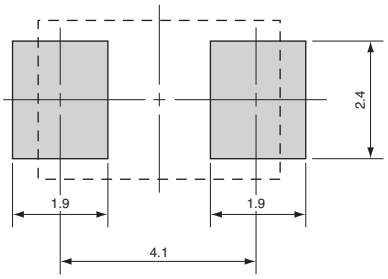

Downloaded from Arrow.com.

Crystal Units
Surface Mount Type CX8045GB (CX-8045G)

KYOCERA

8.0×4.5mm for Consumer Products

RoHS Compliant

Features

- Crystal unit for Consumer Products
- Small and low profile (8.0×4.5×1.8mm)
- Ceramic package
- Product with lead free terminations
- Reflow compatible

Applications

- Digital Electronics
- Consumer Products
- Car audio and accessories

How to Order

CX8045GB 07200 □□ □ □ □ □□

① ② ③ ④ ⑤ ⑥ ⑦

① Series ② Frequency

③ Load Capacitance

H0	12 pF	Std.

④ Frequency Stability

P	±50×10⁻⁶	Std.

⑤Operating Temp. Range ⑥Frequency Temp. Stability

ES	–10 to +70°C	±50×10⁻⁶	Std.	to 40000kHz
ET	–10 to +70°C	±100×10⁻⁶	Std.	from 40001kHz

⑦ Individual Specification... Std.Spec. as "ZZ"

Specifications

Item	Symbol	Specification		Units	Remarks
Frequency Range	f_{nom}	5000 to 48000		kHz	
Overtone Order	OT	Fundamental		—	
Load Capacitance	CL	12		pF	
Frequency Stability	f_{tol}	±50		×10⁻⁶	@ 25°C
Motional Series Resistance	R1	Table 1		ohm	
Drive Level	DL	Table 2		μW	
Operating Temp. Range	T_{use}	–10 to +70		°C	
Storage Temp. Range	T_{stg}	–40 to +85		°C	
Frequency Temp. Characteristics	f_{tem}	±50 (5000 to 40000kHz)	±100 (40001 to 48000kHz)	×10⁻⁶	ref.@ 25°C over operating temperature range

∗ Please contact us for other specifications.

Typical Frequencies and Part Numbers

Frequency (kHz)	Standard Part Number
7200.000	CX8045GB07200H0PESZZ
14318.180	CX8045GB14318H0PESZZ
16000.000	CX8045GB16000H0PESZZ
16384.000	CX8045GB16384H0PESZZ
16934.400	CX8045GB16934H0PESZZ
19660.800	CX8045GB19660H0PESZZ
20000.000	CX8045GB20000H0PESZZ
21477.720	CX8045GB21477H0PESZZ
24000.000	CX8045GB24000H0PESZZ
24576.000	CX8045GB24576H0PESZZ
27000.000	CX8045GB27000H0PESZZ
28636.360	CX8045GB28636H0PESZZ
30000.000	CX8045GB30000H0PESZZ
32000.000	CX8045GB32000H0PESZZ
36000.000	CX8045GB36000H0PESZZ
40000.000	CX8045GB40000H0PESZZ

Table1 Motional Series Resistance

Frequency Range	Motional Series Resistance	Units
5000 to 7199kHz	500 max.	ohm
7200 to 9999kHz	200 max.	
10000 to 11999kHz	150 max.	
12000 to 48000kHz	100 max.	

Table2 Level of Drive

Frequency Range	Drive Level	Units
5000 to 15999kHz	10 (500 max.)	μW
16000 to 24999kHz	10 (300 max.)	
25000 to 48000kHz	10 (100 max.)	

Dimensions

(Unit: mm)

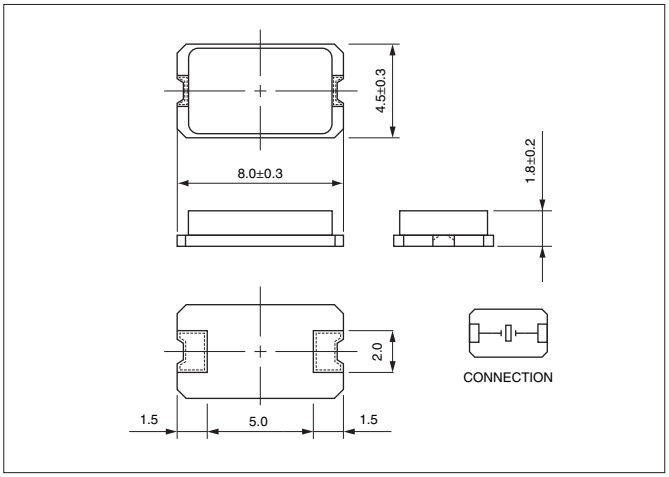

Recommended Land Pattern

(Unit: mm)

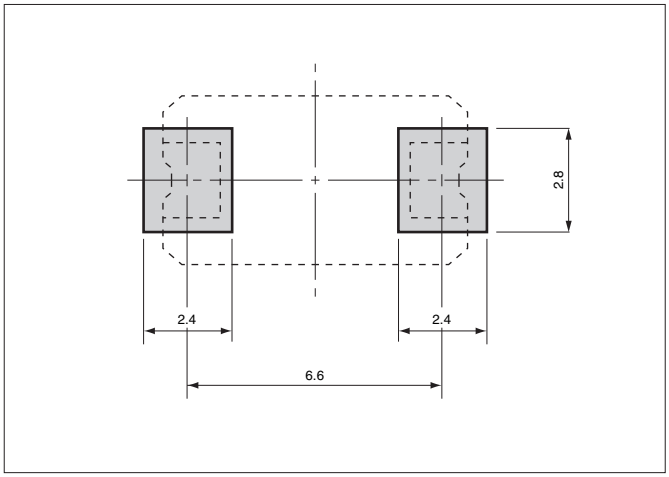

Downloaded from Arrow.com.

Crystal Units
Surface Mount Type CX1255GB (CX-5FD)

KYOCERA

11.8×5.5mm for Consumer Products

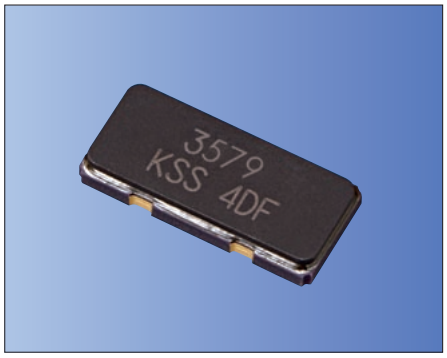

RoHS Compliant

Features

- Crystal unit for Consumer Products
- Small and low profile (11.8×5.5×1.8mm)
- Ceramic package
- Product with lead free terminations
- Reflow compatible

Applications

- Digital Electronics
- Consumer Products
- Car audio and accessories

How to Order

CX1255GB 04000 □□ □ □ □ □□
① ② ③ ④ ⑤ ⑥ ⑦

① Series ② Frequency

③ Load Capacitance

H0	12 pF	Std.

④ Frequency Stability

P	±50×10⁻⁶	Std.

⑤Operating Temp. Range ⑥Frequency Temp. Stability

ES	−10 to +70°C	±50×10⁻⁶	Std.

⑦ Individual Specification... Std.Spec. as "ZZ"

Specifications

Item	Symbol	Specification	Units	Remarks
Frequency Range	f_{nom}	3500 to 28999	kHz	
Overtone Order	OT	Fundamental	—	
Load Capacitance	CL	12	pF	
Frequency Stability	f_{tol}	±50	$\times 10^{-6}$	@ 25°C
Motional Series Resistance	R1	Table 1	ohm	
Drive Level	DL	Table 2	μW	
Operating Temp. Range	T_{use}	−10 to +70	°C	
Storage Temp. Range	T_{stg}	−40 to +85	°C	
Frequency Temp. Characteristics	f_{tem}	±50	$\times 10^{-6}$	ref.@ 25°C over operating temperature range

∗ Please contact us for other specifications.

Typical Frequencies and Part Numbers

Frequency (kHz)	Standard Part Number
3579.545	CX1255GB03579H0PESZZ
3686.400	CX1255GB03686H0PESZZ
4000.000	CX1255GB04000H0PESZZ
6000.000	CX1255GB06000H0PESZZ
8000.000	CX1255GB08000H0PESZZ
12000.000	CX1255GB12000H0PESZZ
14318.180	CX1255GB14318H0PESZZ
16000.000	CX1255GB16000H0PESZZ
16934.400	CX1255GB16934H0PESZZ
19660.800	CX1255GB19660H0PESZZ
20000.000	CX1255GB20000H0PESZZ

Table1 Motional Series Resistance

Frequency Range	Motional Series Resistance	Units
3500 to 3999kHz	300 max.	ohm
4000 to 7999kHz	200 max.	
8000 to 11999kHz	120 max.	
12000 to 28999kHz	100 max.	

Table2 Level of Drive

Frequency Range	Drive Level	Units
3500 to 15999kHz	10 (500 max.)	μW
16000 to 24999kHz	10 (300 max.)	
25000 to 28999kHz	10 (100 max.)	

Dimensions

(Unit: mm)

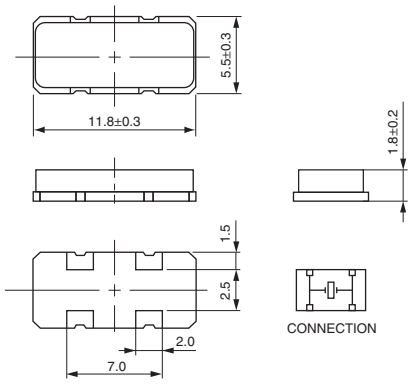

Recommended Land Pattern

(Unit: mm)

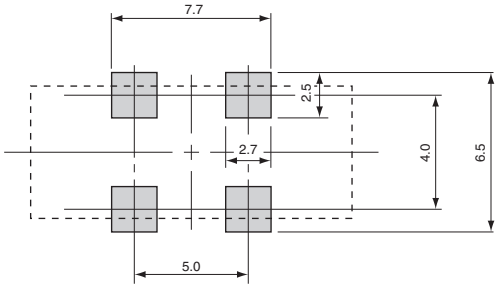

Downloaded from Arrow.com.

Crystal Units
Leaded Type HC49SFWB (HC-49/ U-S)

KYOCERA

for Consumer Products

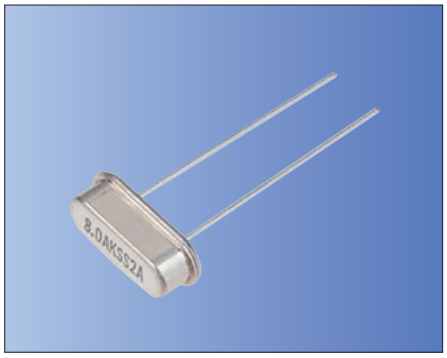

Pb Free RoHS Compliant

Features

- Crystal unit for Consumer Products
- Metal package, leaded type
- A resistance weld hermetic sealed type
- Suitable for high density assembly and mass production

Applications

- Digital Electronics
- Consumer Products
- Car audio and accessories

How to Order

HC49SFWB 03200 □□ □ □ □ □□
① ② ③ ④ ⑤ ⑥ ⑦

① Series ② Frequency

③ Load Capacitance

H0	12 pF	Std.

④ Frequency Stability

P	±50×10⁻⁶	Std.

⑤Operating Temp. Range ⑥Frequency Temp. Stability

ES	−10 to +70°C	±50×10⁻⁶	Std.

⑦ Individual Specification... Std.Spec. as "ZZ"

Specifications

Item	Symbol	Specification		Units	Remarks
Frequency Range	f_{nom}	3200 to 33999	30 to 60 (MHz)	kHz	
Overtone Order	OT	Fundamental	3rd. Overtone	—	
Load Capacitance	CL	12		pF	
Frequency Stability	f_{tol}	±50		$\times 10^{-6}$	@ 25°C
Motional Series Resistance	R1	Table 1		ohm	
Drive Level	DL	Table 2		μW	
Operating Temp. Range	T_{use}	−10 to +70		°C	
Storage Temp. Range	T_{stg}	−40 to +85		°C	
Frequency Temp. Characteristics	f_{tem}	±50		$\times 10^{-6}$	ref.@ 25°C over operating temperature range

∗ Please contact us for other specifications.

Table1 Motional Series Resistance

Frequency Range	Motional Series Resistance	Units
3200 to 3499kHz	300 max.	ohm
3500 to 4099kHz	150 max.	
4100 to 4799kHz	120 max.	
4800 to 5999kHz	100 max.	
6000 to 11999kHz	90 max.	
12000 to 13499kHz	70 max.	
13500 to 33999kHz	50 max.	
30 to 60MHz	150 max.	

Table2 Level of Drive

Frequency Range	Drive Level	Units
3200 to 15999kHz	10 (500 max.)	μW
16000 to 24999kHz	10 (300 max.)	
25000 to 33999kHz	10 (100 max.)	
30 to 60MHz	10 (300 max.)	

Typical Frequencies and Part Numbers

Frequency (kHz)	Standard Part Number
3200.000	HC49SFWB03200H0PESZZ
3579.545	HC49SFWB03579H0PESZZ
3686.400	HC49SFWB03686H0PESZZ
4000.000	HC49SFWB04000H0PESZZ
4194.304	HC49SFWB04194H0PESZZ
4332.000	HC49SFWB04332H0PESZZ
4433.619	HC49SFWB04433H0PESZZ
4500.000	HC49SFWB04500H0PESZZ
4915.200	HC49SFWB04915H0PESZZ
6000.000	HC49SFWB06000H0PESZZ
6144.000	HC49SFWB06144H0PESZZ
7200.000	HC49SFWB07200H0PESZZ
7372.800	HC49SFWB07372H0PESZZ
8000.000	HC49SFWB08000H0PESZZ
10000.000	HC49SFWB10000H0PESZZ
10738.635	HC49SFWB10738H0PESZZ
11000.000	HC49SFWB11000H0PESZZ
11059.200	HC49SFWB11059H0PESZZ
12000.000	HC49SFWB12000H0PESZZ
12288.000	HC49SFWB12288H0PESZZ
13500.000	HC49SFWB13500H0PESZZ
14318.180	HC49SFWB14318H0PESZZ
16000.000	HC49SFWB16000H0PESZZ
16934.400	HC49SFWB16934H0PESZZ
17280.000	HC49SFWB17280H0PESZZ
17734.476	HC49SFWB17734H0PESZZ
20000.000	HC49SFWB20000H0PESZZ
21477.270	HC49SFWB21477H0PESZZ
24000.000	HC49SFWB24000H0PESZZ
24576.000	HC49SFWB24576H0PESZZ
25000.000	HC49SFWB25000H0PESZZ
27000.000	HC49SFWB27000H0PESZZ

Dimensions

(Unit: mm)

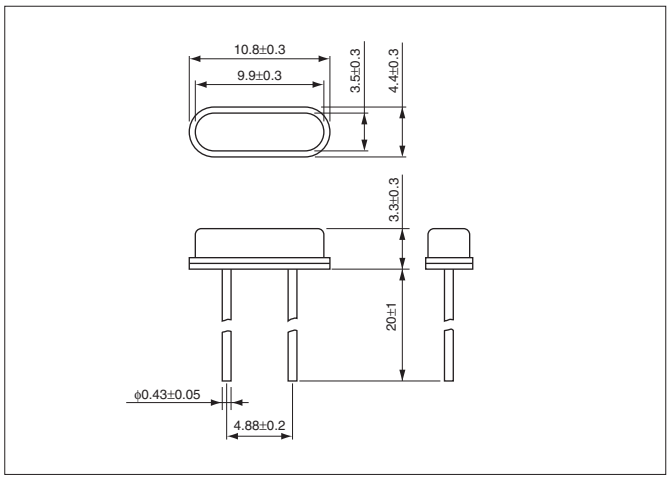

Downloaded from Arrow.com.

Crystal Units
Surface Mount Leaded Type CX49GFWB (CX-49G)

KYOCERA

for Consumer Products

Pb Free RoHS Compliant

Features

- Crystal unit for Consumer Products
- Metal package, leaded type
- A resistance weld hermetic sealed type
- Suitable for high density assembly and mass production

Applications

- Digital Electronics
- Consumer Products
- Car audio and accessories

How to Order

CX49GFWB 03579 □□ □ □ □ □□
① ② ③ ④ ⑤ ⑥ ⑦

① Series ② Frequency

③ Load Capacitance

H0	12 pF	Std.

④ Frequency Stability

P	$\pm 50\times10^{-6}$	Std.

⑤ Operating Temp. Range ⑥ Frequency Temp. Stability

ES	−10 to +70°C	$\pm 50\times10^{-6}$	Std.

⑦ Individual Specification... Std.Spec. as "ZZ"

Specifications

Item	Symbol	Specification		Units	Remarks
Frequency Range	f_{nom}	3200 to 33999	30 to 60 (MHz)	kHz	
Overtone Order	OT	Fundamental	3rd. Overtone	—	
Load Capacitance	CL	12		pF	
Frequency Stability	f_{tol}	±50		$\times10^{-6}$	@ 25°C
Motional Series Resistance	R1	Table 1		ohm	
Drive Level	DL	Table 2		μW	
Operating Temp. Range	T_{use}	−10 to +70		°C	
Storage Temp. Range	T_{stg}	−40 to +85		°C	
Frequency Temp. Characteristics	f_{tem}	±50		$\times10^{-6}$	ref.@ 25°C over operating temperature range

∗ Please contact us for other specifications.

Table1 Motional Series Resistance

Frequency Range	Motional Series Resistance	Units
3200 to 3499kHz	300 max.	ohm
3500 to 4099kHz	150 max.	
4100 to 4799kHz	120 max.	
4800 to 5999kHz	100 max.	
6000 to 11999kHz	90 max.	
12000 to 13499kHz	70 max.	
13500 to 33999kHz	50 max.	
30 to 60MHz	150 max.	

Table2 Level of Drive

Frequency Range	Drive Level	Units
3200 to 15999kHz	10 (500 max.)	μW
16000 to 24999kHz	10 (300 max.)	
25000 to 33999kHz	10 (100 max.)	
30 to 60MHz	10 (300 max.)	

Typical Frequencies and Part Numbers

Frequency (kHz)	Standard Part Number
3200.000	CX49GFWB03200H0PESZZ
3579.545	CX49GFWB03579H0PESZZ
3686.400	CX49GFWB03686H0PESZZ
4000.000	CX49GFWB04000H0PESZZ
4194.304	CX49GFWB04194H0PESZZ
4332.000	CX49GFWB04332H0PESZZ
4433.619	CX49GFWB04433H0PESZZ
4500.000	CX49GFWB04500H0PESZZ
4915.200	CX49GFWB04915H0PESZZ
6000.000	CX49GFWB06000H0PESZZ
6144.000	CX49GFWB06144H0PESZZ
7200.000	CX49GFWB07200H0PESZZ
7372.800	CX49GFWB07372H0PESZZ
8000.000	CX49GFWB08000H0PESZZ
10000.000	CX49GFWB10000H0PESZZ
10738.635	CX49GFWB10738H0PESZZ
11000.000	CX49GFWB11000H0PESZZ
11059.200	CX49GFWB11059H0PESZZ
12000.000	CX49GFWB12000H0PESZZ
12288.000	CX49GFWB12288H0PESZZ
13500.000	CX49GFWB13500H0PESZZ
14318.180	CX49GFWB14318H0PESZZ
16000.000	CX49GFWB16000H0PESZZ
16934.400	CX49GFWB16934H0PESZZ
17280.000	CX49GFWB17280H0PESZZ
17734.476	CX49GFWB17734H0PESZZ
20000.000	CX49GFWB20000H0PESZZ
21477.270	CX49GFWB21477H0PESZZ
24000.000	CX49GFWB24000H0PESZZ
24576.000	CX49GFWB24576H0PESZZ
25000.000	CX49GFWB25000H0PESZZ
27000.000	CX49GFWB27000H0PESZZ

Dimensions

(Unit: mm)

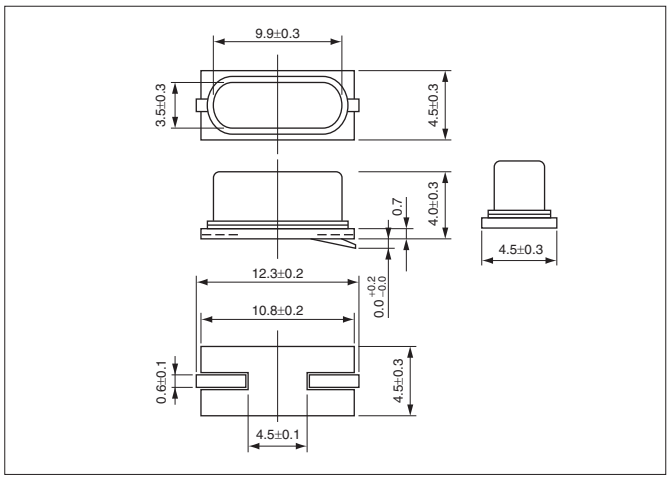

Recommended Land Pattern

(Unit: mm)

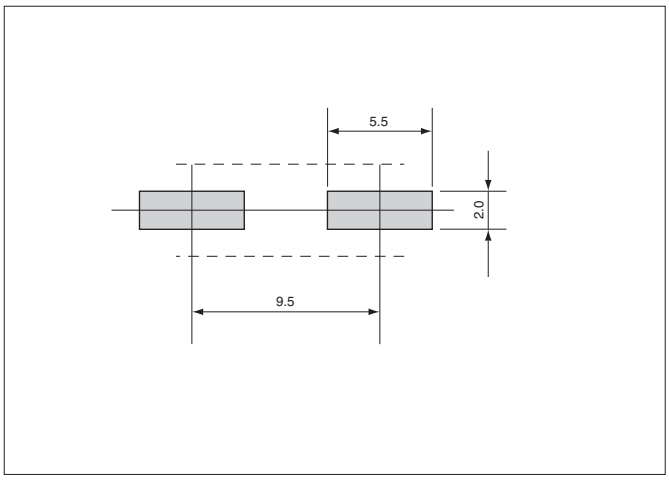

Downloaded from Arrow.com.