Crystal Units
Surface Mount Type CX3225GB

KYOCERA

3.2×2.5mm for Consumer Products

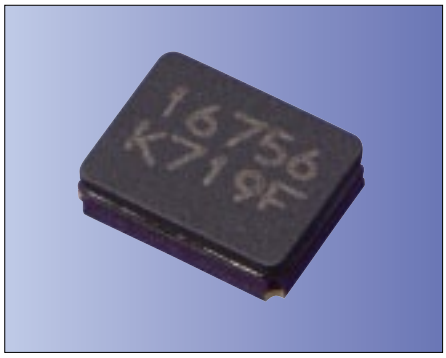

RoHS Compliant

Features

- Crystal unit for Consumer Products
- Small and low profile 0.9mm max. (3.2×2.5×0.8mm)
- Ceramic package
- Reflow compatible

Applications

- Digital Electronics
- Consumer Products

How to Order

CX3225GB 27000 □□ □ □ □ □□
① ② ③ ④ ⑤ ⑥ ⑦

① Series
② Frequency
③ Load Capacitance

B0	6 pF	—
D0	8 pF	Std.
F0	10 pF	—

④ Frequency Stability

H	±20×10⁻⁶	Std.

⑤ Operating Temp. Range ⑥ Frequency Temp. Stability

EQ	−10 to +70°C	±30×10⁻⁶	Std.

⑦ Individual Specification

Packaging (Tape & Reel 3000/ 1000 pcs./ reel)

Specifications

Item	Symbol	Specification	Units	Remarks
Frequency Range	f_{nom}	9800 to 54000	kHz	
Overtone Order	OT	Fundamental	—	
Load Capacitance	CL	8	pF	
Frequency Stability	f_{tol}	±20	$\times 10^{-6}$	25°C±3°C
Motional Series Resistance	R1	Table 1	ohm	
Drive Level	DL	Table 2	µW	
Operating Temp. Range	T_{use}	−10 to +70	°C	
Storage Temp. Range	T_{stg}	−40 to +85	°C	
Frequency Temp. Characteristics	f_{tem}	±30	$\times 10^{-6}$	Freq. deviation from the value at 25°C

• Please contact us for other specifications.

Typical Frequencies and Part Numbers

Frequency (kHz)	Part Number
10000.000	CX3225GB10000D0HEQZ1
12000.000	CX3225GB12000D0HEQZ1
13560.000	CX3225GB13560D0HEQZ1
14318.180	CX3225GB14318D0HEQZ1
14745.600	CX3225GB14745D0HEQZ1
16000.000	CX3225GB16000D0HEQZ1
18432.000	CX3225GB18432D0HEQZ1
19200.000	CX3225GB19200D0HEQZ1
20000.000	CX3225GB20000D0HEQZ1
22579.200	CX3225GB22579D0HEQZ1
24000.000	CX3225GB24000D0HEQZ1
24576.000	CX3225GB24576D0HEQZ1
25000.000	CX3225GB25000D0HEQZ1
27000.000	CX3225GB27000D0HEQZ1
27120.000	CX3225GB27120D0HEQZ1
30000.000	CX3225GB30000D0HEQZ1
32000.000	CX3225GB32000D0HEQZ1
33333.000	CX3225GB33333D0HEQZ1
38400.000	CX3225GB38400D0HEQZ1
40000.000	CX3225GB40000D0HEQZ1
48000.000	CX3225GB48000D0HEQZ1
54000.000	CX3225GB54000D0HEQZ1

Table1 Motional Series Resistance

Frequency Range	Motional Series Resistance
9800 to 11999kHz	300Ω max.
12000 to 13999kHz	250Ω max.
14000 to 15999kHz	100Ω max.
16000 to 19999kHz	80Ω max.
20000 to 26999kHz	60Ω max.
27000 to 54000kHz	50Ω max.

Table2 Level of Drive

Frequency Range	Level of Drive
9800 to 54000kHz	10µW (100µW max.)

Dimensions

(Unit: mm)

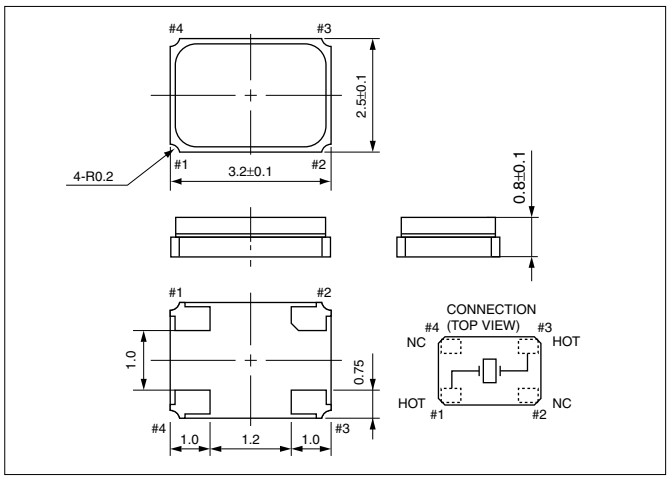

Recommended Land Pattern

(Unit: mm)

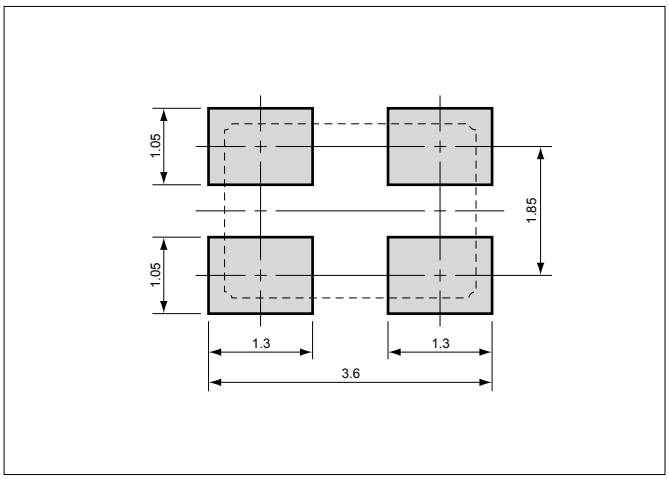

Downloaded from Arrow.com.