Crystal Units
Surface Mount Type CX3225GA

KYOCERA

3.2×2.5mm for Automotive

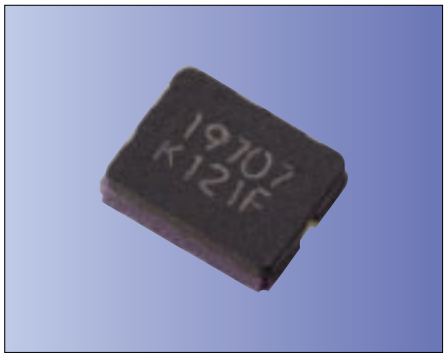

RoHS Compliant

Features

- Crystal unit for automotive electronics
- Small and low profile (3.2×2.5×0.85mm)
- Ceramic package
- Reflow compatible
- Acceptable heat cycle solder junction for 3000 cycle (–40 to +125°C)
- AEC-Q200 qualified

Applications

- ECU
- TPMS
- High-Speed Automotive Network (Flex Ray™ etc.)

How to Order

CX3225GA 16000 □□ □ □ □ □□
① ② ③ ④ ⑤ ⑥ ⑦

① Series ② Frequency
③ Load Capacitance ④ Frequency Stability

D0	8 pF	Std.	P	$\pm50\times10^{-6}$	Std.

⑤ Operating Temp. Range ⑥ Frequency Temp. Stability

TW	–40 to +150°C	$\pm200\times10^{-6}$	Std.

⑦ Individual Specification

Packaging (Tape & Reel 3000 pcs./ reel)

Specifications

Item	Symbol	Specification	Units	Remarks
Frequency Range	f_{nom}	9800 to 54000	kHz	
Overtone Order	OT	Fundamental	—	
Load Capacitance	CL	8	pF	
Frequency Stability	f_{tol}	±50	$\times10^{-6}$	25°C±3°C
Motional Series Resistance	R1	Table 1	ohm	
Drive Level	DL	Table 2	µW	
Operating Temp. Range	T_{use}	–40 to +150	°C	
Storage Temp. Range	T_{stg}	–40 to +150	°C	
Frequency Temp. Characteristics	f_{tem}	±200	$\times10^{-6}$	Freq. deviation from the value at 25°C

- Please contact us for other specifications.

Typical Frequencies and Part Numbers

Frequency (kHz)	Part Number
9843.750	CX3225GA09843D0PTWZ1
10000.000	CX3225GA10000D0PTWZ1
12000.000	CX3225GA12000D0PTWZ1
12800.000	CX3225GA12800D0PTWZ1
13560.000	CX3225GA13560D0PTWZ1
16000.000	CX3225GA16000D0PTWZ1
19200.000	CX3225GA19200D0PTWZ1
20000.000	CX3225GA20000D0PTWZ1
24000.000	CX3225GA24000D0PTWZ1
26000.000	CX3225GA26000D0PTWZ1
28636.360	CX3225GA28636D0PTWZ1
32000.000	CX3225GA32000D0PTWZ1
40000.000	CX3225GA40000D0PTWZ1

Table1 Motional Series Resistance

Frequency Range	Motional Series Resistance
9800 to 11999kHz	500Ω max.
12000 to 13999kHz	300Ω max.
14000 to 15999kHz	200Ω max.
16000 to 19999kHz	100Ω max.
20000 to 26999kHz	100Ω max.
27000 to 54000kHz	100Ω max.

Table2 Level of Drive

Frequency Range	Level of Drive
9800 to 54000kHz	10µW (200µW max.)

Dimensions

(Unit: mm)

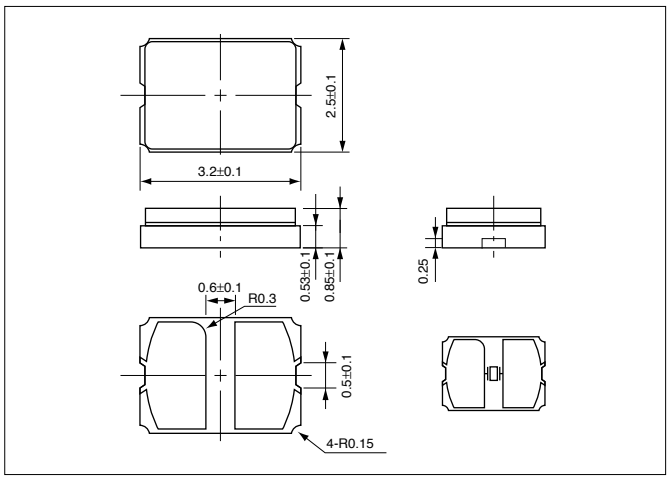

Recommended Land Pattern

(Unit: mm)

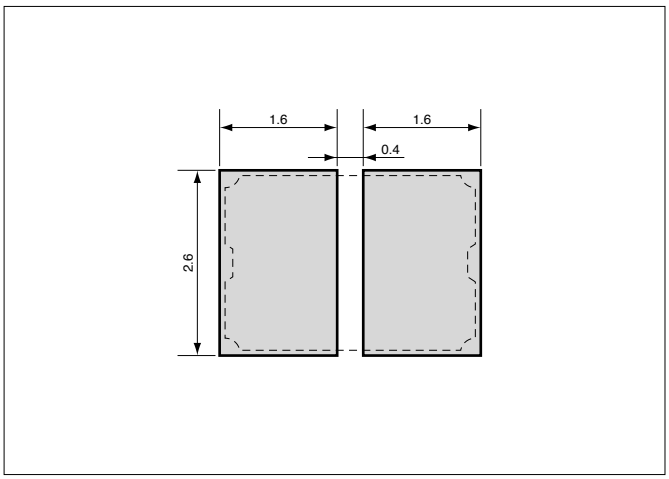

Downloaded from Arrow.com.