KILO INTERNATIONAL

Home

Dials

Knobs

Distributors

Contact Us

Specials

400 SERIES 500 SERIES 600 SERIES

The 400, 500 and 600 series requires only 1 square inch of panel space and mounts on true 1 inch centers. Models are available for 1/4", 1/8", 3/32" and metric shaft configuarations. Models are available with or without brakes.

400 Series: 1" Turns-counting Dial; **10 turn calibration**. Very simply, the 400 series is a turns-counting dial without compromise. It is the standard for the industry. This dial is by far our most popular turns-counting dial. The 400 series dial has a patented positive-transfer turning mechanism that allows it to be smooth and responsive to the user. The operator experiences absolutely zero backlash, because the base unit with the index line and the brake assembly are secured to the panel without locating lugs and additional holes. The dial reveals distinctive, easy to read primary and secondary scales.

500 Series: 1" Turns-counting Dial; **1 turn calibration**.

600 Series: 1" Turns-counting Dial; **No calibration**.

400, 500 & 600 Mechanical Specifications

TOP VIEW

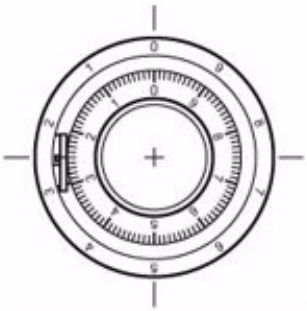

SIDE VIEW

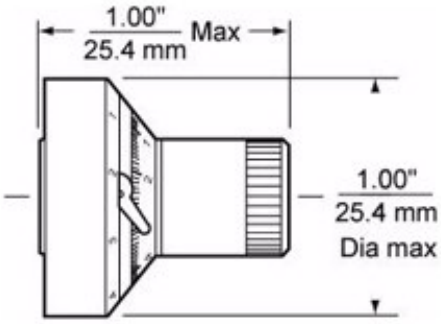

DIAL SHAFT HOLE	POT. SHAFT SIZE	MOUNTING NUT
1/4" - SHAFT	.2500 - +.0000/.0006	3/8 - 32 NEF2
1/8" - SHAFT	.1250 - +.0000/-.0006	1/4 - 32 NEF2
3/32" - SHAFT	.0935 - +.0000/-.0006	1/4 - 32 NEF2

contact:

KILO INTERNATIONAL

1952 Ironton Blvd
Provo, UT 84606
USA

TEL 801.377.5530
FAX 801.377.5573

KILOINTERNATIONAL.COM KILOINTERNATIONAL.COM KILOINTERNATIONAL.COM KILOINTERNATIONAL.COM KILOINTERNATIONAL.COM KILOINTERNATIONAL.COM KILOINTERNATIONAL

- Shaft Extension beyond face of panel: .600" Min./.800" Max./.725" Optimum
- Pot. Bushing Extension beyond face of panel: .125" Min. thread (full thread)/.297" Max.
- Maximum Weight: .65oz/18 gram

Ordering Chart:

MODEL	COLOR & SHAFT	BRAKE OPTION
400	10 - Black w/ 1/4" Shaft	1 - No Brake
500	20 - Black w/ 1/8" Shaft	2 - Short Lever
600	30 - Black w/ 3/32" Shaft	3 - Long Lever
2500	60 - Clear w/ 1/4" Shaft	
2600	70 - Clear w/ 1/8" Shaft	
	80 - Clear w/ 3/32" Shaft	

Example: An 462 dial would be an 400 series dial clear aluminum with a 1/4" shaft and a short brake.

Copyright ©2005 Kilo International

.COM KILOINTERNATIONAL.COM KILOINTERNATIONAL.COM KILOINTERNATIONAL.COM KILOINTERNATIONAL.COM KILOINTERNATIONAL.COM KILOINTERNATIONAL.COM KILOINTERNATIO