MICRO SWITCH
A DIVISION OF MINNEAPOLIS-HONEYWELL REGULATOR COMPANY
FREEPORT, ILLINOIS
FED. MFR. CODE 91929

SWITCH – ENCLOSED

2M_7 5

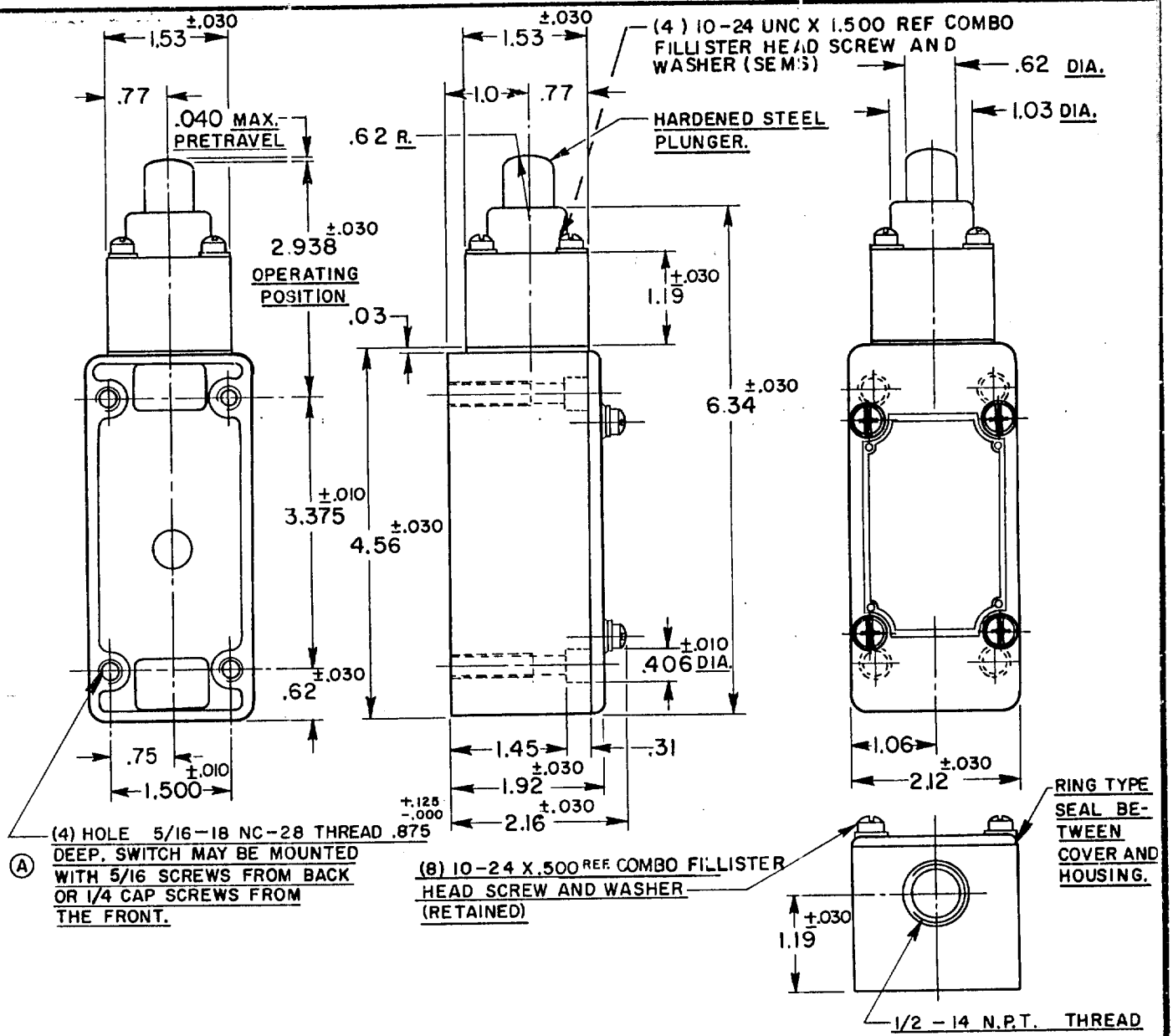

NOTE–

1–IT IS ESSENTIAL TO PREVENT ENTRANCE OF HARMFUL AGENTS THRU THE CONDUIT OPENING TO OBTAIN THE FULL BENEFIT OF THE SEALED CONSTRUCTION PROVIDED IN THIS UNIT.

2–SWITCH WILL PERFORM SATISFACTORILY IN TEMPERATURE TO MINUS 30° F.

(B) 3–BASIC SWITCHING ELEMENT LISTED BY UNDERWRITERS' LABORATORIES, INC.

THIS DRAWING COVERS A PROPRIETARY ITEM AND IS THE PROPERTY OF MICRO SWITCH, A DIVISION OF HONEYWELL. THIS DRAWING IS NOT TO BE COPIED OR USED WITHOUT THE APPROVAL OF MICRO SWITCH.

CHARACTERISTICS	ELECTRICAL DATA		SCALE 1/2 TO 1
OPERATING FORCE — 6 LBS. APPROX.	CONTACT ARRANGEMENT D.P.D.T.	BREAK DISTANCE .020 MIN.	DO NOT SCALE PRINT
RELEASE FORCE — 4 LBS. APPROX.	3 10 A-125 OR 250 VAC; 0.3 A-125 VDC; 0.15 A-250 VDC		UNLESS OTHERWISE SPECIFIED DIMENSIONS ARE IN INCHES
DIFFERENTIAL TRAVEL — .020 MAX.			TOLERANCES ARE:
OVERTRAVEL — .485 MIN.			ONE PLACE (.0) ±.030; TWO PLACE (.00) ±.015; THREE PLACE (.000) ±.005; ANGLES ±
SWITCH-BASIC REPLACEMENT DT-2R711-A7			WEIGHT

REPLACES
RELEASE NO. SR 5625
DRAWING NUMBER M
CHECK CNT 27 AUG. '56
CHECK JWM 27 AUG. '56
CHECK R.I.Z 30 AUG. '56
DRAWN K.F.M. 22 AUG. 56
FO-50378