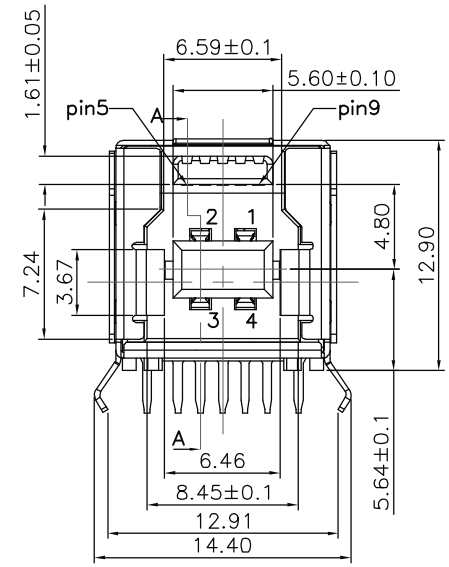

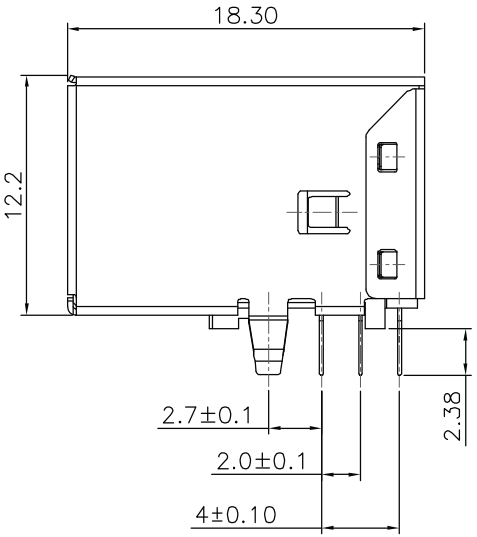

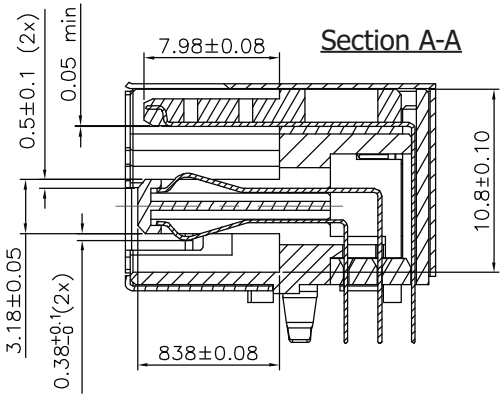

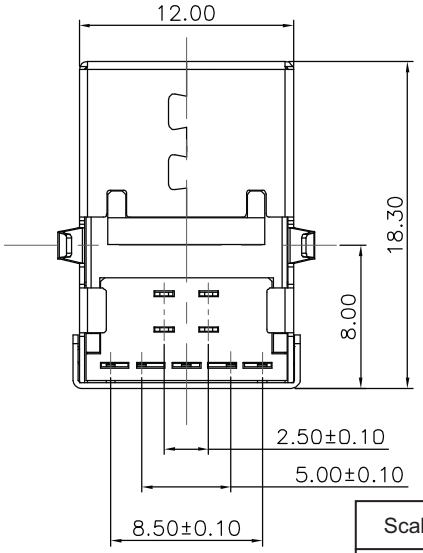

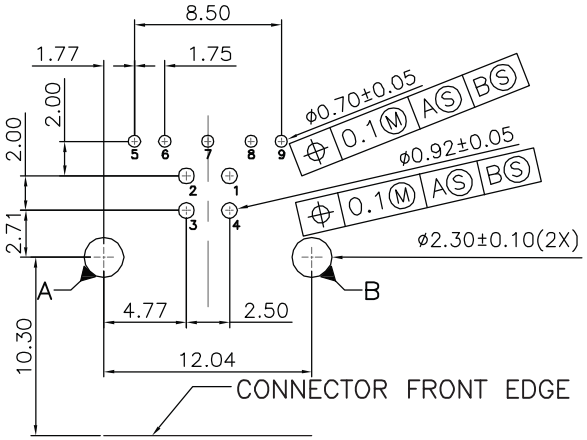

Recommended PCB Layout

Material:

- Housing: LCP UL 94V-0
- Contact: 1~4 pin: Copper(T=0.20MM)
- Contact 5-9 pin: Brass(T=0.20MM)
- Front Shell: Brass(T=0.30MM)
- Cover Shell: SPCC(T=0.20MM)
- Terminal plating: Gold flash all over 50μ" min. nickel and 1μ" min. tin all over 50μ" min. nickel on solder area
- Shell plating: 150μ" min. nickel over 20μ" min. brass
- Operating Temperature: -40°C~+85°C

Electrical:

- Current Current rating: 1.5A
- Withstanding voltage: 100V AC(RMS)
- Insulation Resistance: 100Ω Min.
- Contact Resistance: 30Ω Max.
- Dielectric Withstanding Voltage: 500V r.m.s.
- Mating force: 3.57KgF Max.
- Unmating force: 1.02KgF Min.
- Durability: Mandatory 5,000 cycles

Unit: MM±0.25MM

RoHS Complaint

Scale	1:1
TOLERANCE	
X.X	±0.40
X.XX	±0.25
X.XXX	±0.15
Angle	±3°

Modification	Date	Name

		Name
Drawn	10.19.11	Chappell
Approved		

ASSMANN WSW components

Item No.

AU-Y1007-3-R

Title: USB Connector 3.0 - B Female Type, DIP 90° 15μ", for PCB Mount

Drawing No.

rev00

Replace

Sheet